CITY OF
ISSAQUAH
WASHINGTON

Department of Public Works

WATER STANDARDS

May 2022

CERTIFICATION

The City of Issaquah Water Standards, May 2022, was prepared under the direction and supervision of the following registered professional engineer:

Robert J. York, P.E.
Public Works Director

WATER STANDARDS

May 2022

MAYOR

Mary Lou Pauly

CITY COUNCIL

Russell Joe
Zach Hall
Victoria Hunt
Tola Marts
Barbara De Michele
Chris Reh
Lindsey Walsh

CITY ADMINISTRATOR

Wally Bobkiewicz

PUBLIC WORKS DIRECTOR

Robert York

CITY ATTORNEY

Rachel Turpin

Table of Contents

CERTIFICATION iii
1. DEFINITIONS 3
2. PREFACE 5
3. STANDARDS / REQUIREMENTS 6
A. Applicability 6
B. Document Coordination and Amendments 6
C. Developer Responsibility 6
D. Deviation from Standards 7
E. Errors and Omissions 7
F. Drawing Standards 7
G. Permits 8
H. Inspection and Tests 9
I. Guarantee by Manufacture 10
J. Warranty 10
K. Security 10
L. Determination of “As Equal” 10
M. Easements 10
N. Defective Work and Corrective Action 11
4. DESIGN 12
A. Design Standards 12
B. Materials 13
1. General 13
2. Ductile Iron Pipe and Fittings 13
3. HDPE Pipe and Fittings 14
4. Brass Pipe and Fittings 14
5. Gate Valves 14
6. Butterfly Valves 14
7. Fire Hydrants 14
8. Valve Boxes 14
9. Service Saddle 14
10. Copper Service Pipe 14
11. Plastic Service Pipe 14
12. Air and Vacuum Release Valves 15
13. Hydrant Guard Posts 15
14. Valve Marker Posts 15
15. Concrete Blocking 15

16. Bolts in Piping 15
17. Flange Gaskets 15
18. Foundation Gravel 15
19. Bedding Concrete 15
20. Bedding Material 15
21. Imported Backfill Material 15
22. Asphalt Concrete 16
23. Crushed Surfacing 16
24. Pressure Reducing Valve (PRV) Station 16
25. Vault Installation 16
C. Setbacks and Clearances from other Utilities 17
5. CONSTRUCTION 18
A. General 18
B. Underground Utilities 18
C. Site Maintenance 19
D. Trench Dewatering 20
E. Trench Excavation 21
F. Sheeting and Shoring 21
G. Bury Depth 21
H. Pipe Laying 21
I. Bedding, Backfill and Compaction 22
J. Tunneling 22
K. Highway Crossings 22
L. Fire Hydrant Installation 23
M. Blow-Off Assemblies 23
N. Valve Installations 23
O. Concrete Blocking 23
P. Air and Vacuum Release Valve Installation 24
Q. Hydrostatic Tests 24
R. Sterilization of Water Mains 24
S. Service Connections 25
T. Connections to Existing Pipelines 25
U. Painting 26
APPENDIX A - Record Drawing Requirements And Drafting Standards 27
APPENDIX B - Approved Materials List (February 2022) 30
APPENDIX C - Spec'd Fire Hydrant Part Numbers 37
APPENDIX D - Water Standard Details Index 38

1. DEFINITIONS

Acceptance of Improvement	Adoption of a resolution by the City of Issaquah City Council, accepting the improvements into City maintenance or written acceptance by the City of Issaquah City Engineer where authorized by City Council. Acceptance of a private development project requires written acceptance by the City Engineer.
City	City of Issaquah, a municipal corporation, or the Director of Public Works and his/her authorized representatives.
City Engineer	Director or Interim Director of Public Works or City of Issaquah Engineer having authorities specified in State Law or City Ordinances or his/her designated representatives.
Contractor	The person, partnership, firm, or corporation contracting to do the work under these Documents. The term shall also include the Contractor's agents, employees, and subcontractors.
Developer	The owner and/or other owners of property to be benefited by the proposed extension, including the Developer's agents. Any person, firm, partnership, association, joint venture, or corporation of any other entity responsible for a given project.
Development	The uses to which the land that is the subject of a discretionary action by the City of Issaquah shall be placed, the buildings to be constructed and all alterations of the land and construction incident thereof.
Engineer	The Consulting Engineer, or City Engineer and the Engineer's staff.
Improvements	Public and private land; grading, street work, curbs, gutters, driveway, storm drain facilities, water mains, sanitary sewers and facilities, public utilities including existing overhead utilities required to be converted to underground, landscaping, and fences to be installed on land to be used for public right of way, private streets and easements, and any other improvements as defined by City of Issaquah Municipal Code
Plans	All drawings, lists, notes, and instructions including reproductions thereof, for the work to be done as an extension to the City system, prepared or approved by the City.
Professional-Engineer of Work/Record	Professionals in the technical fields of Civil Engineering, Electrical Engineering, Geotechnical Engineering, Engineering Geology, Landscape Architecture, Structural Engineering and Surveying currently licensed or registered in the State of Washington and qualified by both experience and educational background in the specific technical areas as warranted by the specific needs of the proposed development project.
Public Works Director	Director or Interim Director of Public Works or his/her designated representative.

Otherwise Specified or As Specified	The directions contained in the Plans, Special Provisions, if any, and otherwise as given by the City incident to the performance of the work other than in these General Specifications.
Work	The labor, materials, superintendence, equipment, transportation, supplies and other facilities necessary to convenient to the completion of the proposed extension described in the application.

2. PREFACE

The City of Issaquah, as a municipal corporation, has a responsibility to the public to ensure utilities laid on public or private streets or easements are constructed in accordance with currently accepted standards. The requirements imposed upon Contractors or Developers by these standards are not arbitrary but are intended by the City as incorporating minimum standards which are prerequisite to acceptance of the work by the City as a part of the utility systems. Privately constructed extensions of and connections to public utilities or other publicly owned and operated systems will not be permitted unless the work is performed in accordance with these standards.

This document provides standard guidance for design and construction of utilities within the City of Issaquah. These Standards are founded from City policy, Codes, and standards of industry practice for design and construction.

The City of Issaquah Comprehensive Plan and utility (Water, Sewer, or Stormwater) System Plan provides policy guidance for the utility network regarding the provisions of level of service. City policies and standards provide a consistent framework for the planning, design, construction, maintenance, operation, and service for the City's utilities and infrastructure. The City manages its utilities and infrastructure in accordance with established federal and state regulations.

These Standards include all items in the Table of Contents, including the Preface, Definitions, Standards/Requirements, Design, Construction and Appendix sections. These Standards do not include design of special facilities, such as booster pump stations or reservoirs. These special facilities require unique design requirements and will be subject to individual review by the City.

3. STANDARDS / REQUIREMENTS

A. Applicability

These Standards shall govern all new construction and upgrading facilities that connect to or become part of the City's system, both in the right-of-way and on private property, even if not owned or maintained by the City. Although these Standards are intended to apply to physical development for City infrastructure, the Standards may not be applicable for every situation encountered during engineering design. Compliance with these Standards does not relieve the designer of the responsibility to apply conservative and sound professional judgment. These are minimum Standards and are intended to assist, but not substitute for competent work by design professionals. As such, the City may at its sole discretion due to special conditions and/or environmental constraints or other situations that may require the application of professional engineering judgement, require more stringent requirements than would normally be required under these Standards.

B. Document Coordination and Amendments

Except where these Standards provide otherwise, all engineering, design and construction shall be in accordance with:

- American Association of State Highway and Transportation Officials (AASHTO) Policy on Geometric Design of Highways and Streets
- Ecology Stormwater Management Manual for Western Washington
- Washington State Department of Health (DOH)
- Department of Ecology (DOE)
- American Water Works Association (AWWA)
- American Public Works Association (APWA)
- American National Standards Institute, Inc. (ANSI)
- Washington State Department of Transportation (WSDOT) Standard Specifications for Road, Bridge, and Municipal Construction
- Manual of Uniform Traffic Control Devices (MUTCD)
- Washington Administrative Code (WAC)
- City of Issaquah's Municipal Code (IMC)
- City of Issaquah's Comprehensive Plan
- City of Issaquah's Water System Plan

When reference is made to any specifications, it shall be the latest revision at the time of construction, except as noted on the plans or herein.

C. Developer Responsibility

At no cost to the City, the developer is responsible for design, preparation of plans, submittal of permit applications, payment of City fees, dedication of right-of-way and easements, construction, surveying, material testing, and construction supervision of all infrastructure improvements. All improvements shall be designed per current City Standards and approved by the City Engineer prior to issuance of any permits for construction. All applications for permits and/or other approvals by the City shall be submitted to the Permit Center for processing.

D. Deviation from Standards

The City Engineer or designee may approve deviations to the Standards herein after consultation and consensus with affected City departments. The decision to grant, deny or modify the proposed deviation shall be documented and be based upon evidence that the request can meet the following criteria:

1. The deviation will achieve the intended result in equivalent or superior design; and
2. The deviation addresses public safety and operation; and
3. The deviation will not adversely affect how well the surrounding nearby public facilities can be maintained; and
4. The deviation will not substantially increase maintenance and/or operation and/or capital replacement costs relative to that which these Standards normally would result in and
5. The deviation is consistent with the land use goals/visions for the area.

Applicants submitting plans for required approvals or permits that do not meet all Standards must submit a request for deviation. The request for deviation may be submitted in advance of the plan drawings via a letter with attachments to describe the deviation and how it meets the above criteria and to be approved ahead of time. Then following that, note the deviation on the face of the drawings. Permits issued based on drawings does not assume approval of any deviations that have not been shown. Deviations from the standards that are not shown on the drawings and a permit is issued based upon those drawings constitutes grounds for revocation of permit(s) and/or withdrawal of any approvals and/or stoppage of any or all of the permitted work. Upon review of the plans, the City may request additional information regarding the request if needed to make a decision. These requests may include but are not limited to engineering calculations, drawings showing aesthetic appearances, additional information on nearby facilities, further analyses regarding public safety and operations of the utility(s), and an explanation of why such a deviation is being requested.

A deviation request for a proposed project cannot be considered until a complete application for a required permit/approval has been submitted.

Any appeal of the decision to grant or deny a deviation shall be reviewed by the Public Works Director.

E. Errors and Omissions

At the discretion of the City Engineer, any significant errors or omissions in the approved plans or information used as a basis for such approvals will constitute grounds for withdrawal of any approvals and/or stoppage of any or all of the permitted work. It shall be the responsibility of the Developer to show cause why such work should continue and make such changes in plans that may be required by the City before the plans are re-approved.

F. Drawing Standards

Water, sanitary sewer, street, and storm sewer designs shall be on separate plan sheets, although alignments of all utilities shall be shown on each utility plan. The City may request profile drawings to show relationship to other underground utilities and/or where the City utility crosses railroad tracks, streets, rivers, and drainage ditches and/or any other places where it would clarify construction. Plan sets may be combined for small projects if improvements are clear and legible (contact City engineer for guidance). Designs for water and sewer can be combined on the same plan sheets if plan scale is 1”=10’, 1”=20’, or 1”=30’. The drawing should be easy to read, with all lines and letters providing clarity between existing and new construction. Architectural scales for utility drawings will not be accepted.

All plans shall have a plot size of 36” x 24” (D size), including title block in PDF format. Project name and site address shall be included in the title block. When more than one sheet is required to cover all of the construction area, an overall drawing will be required. Preliminary plans shall be in PDF format. On plans with more than one sheet, stationing shall proceed from left to right or from bottom to top.

The plan drawing shall clearly show the relationship of the proposed utility to other existing and proposed underground utilities as well as its relationship to street paving, curb, gutters and sidewalks, landscape, and trees. All utility appurtenances (i.e.: valves, fire hydrants, fittings/bends, manholes, catch basins, streetlights, traffic control devices, etc.) shall be called out and fully located by stationing along centerline of street, or base line of easements, etc.

North Arrow shall be included on all plan view drawings. Where possible, the north arrow shall face up and/or to the right-hand side of the plan sheet.

Datum shall show both horizontal (NAD-83/91) and vertical (NAVD 88) control points.

Drafting Standards/Symbols shall conform to Washington State APWA Chapter CAD Standards. Layering shall comply with City requirements (see Appendix A). Lettering shall be done with “Leroy-style” font (AutoCAD “simplex” font).

Upon approval for construction, final plan shall be provided in both hard copy and digital format for record drawings and permanent record. The digital format shall be AutoCAD “.dwg” file, latest version, submitted electronically. The electronic file shall include all plans, profiles, notes, and details.

Shop Drawings, shall have a plot size of 36” x 24” (D size) in PDF format, and may be at any scale which will adequately show the detail necessary for fabrication or construction of the piping, equipment, machinery, etc.

Record Drawings (As-Built), shall meet all the requirements of the Plan Drawing. Final approved record drawings shall also be submitted in mylar form. Utilities outside of public rights-of-way shall be located within easements. Easements and recording numbers shall be shown on the record drawings. See Appendix A for more Record Drawing requirements.

G. Permits

In accordance with the City of Issaquah Municipal Code, permits are required to be obtained from the City of Issaquah prior to commencing construction work within the City. Contact the Community Planning and Development Department for a list of City required permits, approvals, and environmental reviews associated with the requested construction. Permits from other agencies may also be required based on the work being proposed and are the responsibility of the developer to obtain prior to commencing work.

All applications for permits to be issued by the City shall be submitted to the Permit Center for processing.

Specifications, construction drawings, and other required information shall be submitted when approvals or permits are being requested for a project. Construction drawings shall show at a minimum: plan and profile for all existing and proposed improvements, applicable analyses, and reports, proposed and existing utilities; and topography. The drawings shall also include right-of-way or easements, improvement alignments, detail drawings of connection points or special features,

temporary erosion and sedimentation control, construction disturbance area, tree protection, and critical areas and any other pertinent information necessary for construction. The construction methods and materials for all improvements shall conform to the City Design Standards and all other standard plans and specifications of the City or otherwise adopted by the City. To obtain a complete list of specific submittal requirements please contact the Permit Center.

All drawings, plans, specifications, technical reports, etc., prepared for the purpose of obtaining required permits/approvals shall be stamped and signed by the Professional Engineer registered in the State of Washington responsible for the design.

At the discretion of the City Engineer, any significant (as deemed by the City) errors or omissions in the approved plans or information used as a basis for such approvals constitute grounds for revocation of permit(s) and/or withdrawal of any approvals and/or stoppage of any or all of the permitted work. It shall be the responsibility of the Developer to show why such work should continue. In order to continue work the Developer must make necessary changes to the approved plans for approval by the City as required to address the issues.

Prior to receiving a Final Certificate of Occupancy and/or acceptance of the work by the City, the applicant shall submit City approved record drawings for all installed improvements.

H. Inspection and Tests

All work may be subject to inspection by the City except for work around and with water mains which require full time inspection and must be coordinated in advance of the work to ensure staff availability. The City shall at all times have access to the work wherever it is in preparation or progress, and the Contractor shall provide proper facilities for such access and inspection. The Contractor shall make reasonable tests of the work at the Contractor's expense upon the City's request. Whenever work must be specially tested or inspected for compliance with public regulations, or with the Plans and Specifications, the Contractor shall give the City reasonable notice of the readiness of the work for such test or inspection. The City shall attempt to make inspections within one (1) business day of notification by the Contractor. Use My Building Permit to schedule inspections a minimum of 24 hours (1 business day) ahead of when the inspection is needed. Work must not be covered up without consent of the City, and if it should be covered without such consent, it must be uncovered for inspection at the Contractor's expense if request by the City.

Inspections shall be performed as follows:

1. Work performed within the public right-of-way or on private property as described in the Standards, whether by or for a private developer, by City forces, or by a City contractor, shall be done to the satisfaction of the City and in accordance with the Standard Specifications, any approved plans, and the Standards. Unless otherwise authorized, the City must approve any revisions to construction plans in writing before being implemented.
2. The City shall have authority to enforce the Standards, as well as other referenced or pertinent specifications. The City will appoint project engineers, assistants, and inspectors as necessary to inspect the work and they will exercise such authority to ensure the project is constructed in accordance with the standards, standard practices, and good workmanship.
3. It is the responsibility of the Developer, Contractor, or their agents to have an approved set of plans, along with any applicable permits on the job site whenever work is being accomplished.
4. It is the responsibility of the Developer, Contractor, or their agents to notify the City at least 5 days in advance of the commencement of any authorized work. A preconstruction conference

and/or field review shall be required before the commencement of any work on significant projects as defined by the City.

I. Guarantee by Manufacture

If requested by the City, a written guarantee made by the manufacturer of any materials to be incorporated into the work shall be furnished, guaranteeing to the City that such materials shall conform to the Specifications applying to the work.

J. Warranty

The Contractor is required to provide a warranty to the City for facilities constructed for the City. This warranty will be for a period of not less than one (1) year from the date of final acceptance by the City and will cover material and workmanship defects including but not limited to: asphalt, concrete, valves, piping, hydrants, landscaping and 12-month plant establishment period and settlement of trenches below City roadways regardless of whether the trench contained a City utility or privately owned utility.

K. Security

Performance Security. : A security is required per IMC such as Chapters12.12, 16.26, and 18.04 to guarantee the performance of, completion, or corrections to, permitted work. The amount of security shall cover the City's cost to perform the necessary work in accordance with IMC 16.26. When performing work within city right-of-way, on City owned or future City utilities refer to IMC 18.04 for types of securities required.

Securities shall be processed for release by the City upon written final acceptance of the improvements and the plans have been certified "As-Built" record drawings by the Professional Engineer of Work/Record and the Record Drawings approved by the City, all final reports submitted and approved as required and the Warranty Security is posted. l

Warranty Security. A security is required during the warranty period to ensure adequate funds for the City to perform the necessary warranty work should the developer not do so for improvements against any defective work or labor done or defective materials used in the performance of the improvements throughout the warranty period. The warranty period shall be of one year following completion and acceptance of the improvements unless a longer warranty period is required by the City Engineer. The utility security shall be not less than 30% of the total construction cost of the public facilities accepted by the City and posted prior to the Performance Security release.

For City contracted construction projects refer to RCW 39.08.010 for required bonding.

L. Determination of "As Equal"

The City shall be sole judge whether supplies or materials qualify 'as equal' substitutions under the Plans and Specifications. Substitutions are not allowed for items specified as "required" or "sole source".

M. Easements

All easements required shall be obtained by the Developer without cost to the City and shall provide for a permanent easement and construction easement as shown on the Plans. The Developer shall provide the City with supporting date to verify the location of all easements. In the event that legal services are required incident to easements beyond review of the form thereof, the Developer shall pay the costs of such service.

Any required easements shall be obtained (in the name of the City) by Developer at their expense using the City's standard form. Recorded easements shall be delivered prior to acceptance of said improvement, or project close-out, and the original easement shall be delivered to the City. The Developer shall provide all necessary easements at his sole cost regardless of changes in the Contract Plans. The City will require the Developer to provide a survey of the record drawing improvement to verify its location in the easement. All easements shall be explicitly called out as to rights and obligations on the final plat.

General Easement requirements for improvements not located in the right-of-way are as follows (evaluated on a case-by-case basis):

Off-site easements (e.g., easements across property not owned by the development, temporary construction easements), at a minimum, are required prior to permit issuance.

Water: Fifteen (15) foot easement over all water lines and appurtenances.

N. Defective Work and Corrective Action

During construction, work that is found by the City not to comply with the Plans and Specifications shall be remedied so as to comply therewith. Subsequent to completion and within one year after the work has been accepted by City Council, the Developer shall correct or replace any defective work or material discovered by the City. Such correction or replacement shall commence within seven days from the time of receipt of notice from the City and shall be completed promptly.

If not so commenced, or, in emergency, when damage may result from delay, such correction or replacement may be made by the City at the expense of the Developer. The Developer shall reimburse the City, upon demand, for any expense resulting from defects that appear within one year after acceptance of the Developer's work. This includes actual damages, costs of materials and labor expended by the City in making emergency repairs, costs of legal expense, attorney's fees and costs reasonably incurred by the City as a result thereof.

Inspection and project acceptance do not relieve the Developer from the responsibility to provide complete and properly functioning improvements. All corrections required to correct deficiencies shall be borne by the Developer.

4. DESIGN

A. Design Standards

These Design Standards set forth minimum standards for the planning, design, and construction of water facilities. The work shall be done in accordance with the Plans and specifications prepared by the Engineer and approved by the City. These Standards do not include design of special facilities, such as Pump Stations or Reservoirs. These special facilities require unique design requirements and will be subject to individual review by the City. All work and materials shall conform to AWWA standards. As a preliminary guide, the following general standards of construction and materials are set forth:

1. Design shall comply with the Issaquah Municipal Code (IMC), policies and criteria set forth in the City of Issaquah's Water System Plan, and design requirements as defined within these Standards.
2. Pipe shall be Class 52 ductile iron.
3. Fittings must be Ductile Iron (cement lined).
4. All Watermain bends, joints, valves, and connections shall be restrained. See approved materials list for restrained joints.
5. Use of restrained joints is preferred as a standard restraint system. Restraint system shall be clearly identified on the plans and record drawings.
6. Pipe runs from main line to standard hydrants less than 50 feet in length must be a minimum of 6 inches. Pipe runs from main line to standard hydrants more than 50 feet in length must be a minimum of 8 inches.
7. The maximum distance between fire hydrants in single-family use district zones shall be 500 feet. The maximum distance between fire hydrants in commercial, industrial, and apartment (including duplex) use district zones shall be 300 feet.
8. All hydrants newly installed in single-family residential areas shall be supplied by not less than 8-inch mains and shall be capable of delivering 1,000 gpm. fire flow over and above average maximum demands at the farthest point of the installation.
9. Air and vacuum release valves shall be installed at principal high points in the system.
10. Dead-end lines are not permitted except as required for frontage improvements. when unfeasible due to topography, or inability to gain easements, in which case hydrants may be provided at the end of the main.
11. System improvements required for multi-family/commercial/industrial developments will be considered and defined by the City at the time service is requested. All costs for domestic service, fire protection, storage, pumping facilities and flow rate control of the supply will be borne by the commercial/industrial developer.
12. Work shall be done only by Contractors experienced in laying public water mains.
13. Mains shall be laid only in dedicated streets or in easements which have been granted to the City. A street is normally not considered dedicated until the plat which created it has been filed with the King County Recorder.
14. Valves shall be placed on all branches from feeder mains, at intersections, between mains and hydrants, between mains and reservoirs, and between mains and pumps. No length of pipe greater than 600 feet shall be left without valve control. A valve shall be located at the end of all dead-end lines when a future extension is anticipated by the City Engineer.

15. Valved tees and crosses shall be provided where future extensions are expected by the Engineer.
16. Pressure Reducing Valves - Main line pressure reducing stations, built according to the City Standard Details, and approved as to size by the City Engineer, shall be installed where required to maintain a maximum line pressure of 150 psi. Individual pressure-reducing valves are the responsibility of the owner for all services on mains with a pressure of more than 80 psi and shall be located on private property in accordance with the UPC.
17. Placement of surface appurtenances (manhole lids, water valve lids, etc.) in tire track of traffic lanes shall be avoided whenever possible. Meter vaults shall be located outside the pedestrian access route.
18. Backflow prevention devices shall be installed where the possibility of contamination of the water supply system exists and/or as required by the City and shall meet the requirements of the WAC 246-290-490 “Cross-Connection Control”. All backflow prevention assemblies installed shall be on the Washington State Department of Health (DOH) list of approved backflow prevention assemblies, most recent edition at the time of installation, and installed according to the Standard Details.
19. Developer/Contractor to purchase “Best” brand padlocks and/or cores from the City, for all lockable doors, lids, gates, bollards, hatches and/or closures to be assumed/owned by the City. Coordinate with City Inspector to order.

B. Materials

1. General

All materials and equipment shall be new and undamaged. Where possible, the same manufacturer of each item shall be used throughout the job.

All materials not specifically referenced shall comply with applicable sections of ANSI, ASTM, AWWA or the APWA/WSDOT Standard Specifications.

Approved manufactures and model numbers of various materials are listed in Appendix B, Approved Materials, of these Standards. When specific manufactures or models are listed, no substitutions will be allowed without prior approval by the Engineer.

2. Ductile Iron Pipe and Fittings

Ductile iron pipe shall conform to AWWA Standard C151, Thickness Class 52 or as indicated on the Drawings. Pipe and fittings shall have cement mortar lining conforming to AWWA C-104. Joints shall be mechanical joint or push-on joint and shall conform to AWWA C-111.

Ductile iron fitting shall conform to AWWA Standard C-110. Mechanical or push-on joints shall conform to AWWA Standard C-111. Flanged joints shall conform to ASA Standard B-16.1, Class 125. All fittings shall be mortar lined and domestic only.

Polyethylene Pipe encasement for Ductile Iron Pipe shall be used at the direction of the City Engineer and shall conform to AWWA Standard C-105.

Pipe and gaskets shall be compatible with each other.

3. **HDPE Pipe and Fittings**
   May only be used with approval of the City Engineer. HDPE pipe and fittings shall be designed by an Engineer for the specific application, including anchors for slopes. The Engineer will determine gauge of pipe based on surge pressure. HDPE pipe and fittings shall conform to AWWA Standards. A tracer wire is required, see General Standard Detail G-02.

4. **Brass Pipe and Fittings**
   Where brass pipe is specified, the pipe shall be standard weight, Schedule 40, lead free, ASTM B43. Fittings shall be brass or copper.

5. **Gate Valves**
   Shall conform to AWWA C-515 or C-509, be iron body, stainless steel nuts, bolts and stem, resilient seat, double “O” ring seal, dirt seal on outside of stem, non-rising stem, for a minimum of 150 PSI working pressure unless other is specified, with standard two (2) inch operating nut and standard opening rotation shall be counterclockwise. Gate valve 3” and larger shall have flange connections for above ground service, or flange or mechanical joint connection for buried service. (See Standard Details.)

6. **Butterfly Valves**
   May only be used with approval of the City’s Public Works Department. Shall conform to AWWA Standard C504-74 or latest revision thereof. Unless otherwise specified, valves shall be Class 150 or greater, shaft seals shall be "O" ring type, standard opening rotation shall be counterclockwise, and the operating nut shall be standard 2"

7. **Fire Hydrants**
   Fire hydrants will be AVK, Mueller or East Jordan. The part number specified in detail are for a 4’ bury depth; valves will match manufacturer. See Appendix C for additional part numbers. Do not mix parts between AVK, Mueller or East Jordan. Hydrants will come factory white, no repaints allowed and will be furnished with a 5” Storz connection. Hydrant will be constructed facing the roadway in direction of pumper connection. Hydrants shall comply with AWWA C-502. Hydrant shall be of traffic type with break-away flange construction. See Water Standard Detail W-02. See WSDOT Specifications.

8. **Valve Boxes**
   Valve boxes shall be cast or ductile iron, two (2) piece. The top section shall be 18” slip type with 2” “deep skirt” cover. (See Standard Details)

9. **Service Saddle**
   Romac type nylon coated saddle with stainless straps and hardware, single strap for pipe sizes under 12” dia., double strap for 12” and larger pipe sizes. (See applicable Standard Details)

10. **Copper Service Pipe**
    Copper service pipe for underground water service 2” or smaller shall be Type K, soft copper, annealed, seamless, and conforming to the requirements of ASTM B88. (See applicable Standard Details)

11. **Plastic Service Pipe**
    Plastic service pipe shall be manufactured from high molecular weight polyethylene defined by ASTM-2737, NSF Standard 14, and AWWA C901. Pipe shall be copper size (See Standard Details)

12. Air and Vacuum Release Valves

All piping shall be Type K copper brass pipe. Fittings shall be brass. Valves shall be located outside of traffic areas, behind curb or sidewalk. (See Standard Details)

13. Hydrant Guard Posts

Hydrant Guard Posts shall be 6” Class 52 D.I. pipe, 6’ long, filled with concrete. Paint Guard Post(s) white. Post(s) must be cleaned, scuffed, sanded, prepared, and painted per paint manufacturer specification. Apply 1 coat (6 mil thickness) each of primer and paint. See Approved Materials List for primer and paint. D.I. Guard Posts shall only be used in parking lots or as directed. (See Standard Details)

14. Valve Marker Posts

Valve marker posts shall be reinforced concrete posts, 4" X 4” on one end and 6" X 6" on the other end, 42" long. Stenciled in 2-in. letters referencing distance to valve in feet and inches. (See Standard Details)

15. Concrete Blocking

0ne:three:six (1:3:6) mix with six inch (6") maximum slump. (See Standard Details)

16. Bolts in Piping

All bolts shall be of the same type and quality as supplied by the manufacturer of the pipe or fittings and shall conform to WSDOT Standard Specifications

17. Flange Gaskets

Ring-type cloth insert red rubber gaskets 1/8inch thick.

18. Foundation Gravel

Foundation gravel, known as “Ballast”, shall be coarse graded gravel or crushed rock that conforms to WSDOT Standard Spec. 9-03.9(1). Bank run passed through a 3-inch screen may be used provided that it is, in the opinion of the Engineer, uniformly graded and otherwise suitable.

19. Bedding Concrete

Bedding concrete shall be mixed from materials acceptable to the Engineer. See General Standard Detail G-13 Pipe Bedding.

20. Bedding Material

Pipe zone bedding material shall consist of crushed surface top course (CSTC), processed, or naturally occurring granular material free from organic materials or other extraneous or objectionable materials. The material shall have such characteristics of size and shape that meet the specifications for grading and quantity as defined in WSDOT Standard Specs. See General Standard Detail G-13 Pipe Bedding.

21. Imported Backfill Material

Imported backfill material, known as “Common Borrow”, shall consist of no rocks greater than 3” in any dimension, be free from wood, bark, roots or other extraneous material, and shall meet the specifications as further defined in WSDOT Standard Specs. 9-03.14(3). “Common Borrow” shall only be used outside of the roadway and sidewalk prism. Crushed Surface Top Course (CSTC) shall be used within the roadway and sidewalk prism. See General Standard Detail G-01.

22. Asphalt Concrete

Hot Mix Asphalt (HMA) pavement shall conform to the technical requirements of the WSDOT Standard Spec. 5-04 for HMA Cl ½" (wearing) or Cl 1"(other).

23. Crushed Surfacing

For use in the restoration of excavated areas, Base Course, Top Course and Keystone material shall be crushed gravel, free from wood, roots, bark, and other extraneous materials and shall conform to WSDOT Standard Specs. 9-03.9(3). Recycled concrete shall not be used for erosion protection, construction entrance, or temporary stabilization on site.

24. Pressure Reducing Valve (PRV) Station

Unless otherwise shown on the construction plans, a standard pressure reducing station shall be sized and located to maintain maximum and minimum pressure limits. Check PRV manufacturer guidelines for maximum pressure differentials. PRV stations shall be located outside of traveled way. (See Standard Detail)

25. Vault Installation

Vaults for water facilities shall be constructed at the locations shown in the plans and in accordance with the plans, Standard Details and as directed by the Engineer. The vault shall be placed on foundation gravel and compacted to 95% density to support the vault. The vault shall be plumb, watertight, and adjusted to match the finished grade or as directed by the Engineer. Grading shall direct surface water away from the vault. Vault floor shall drain to daylight or to location shown on the plan. Drainpipe shall be minimum 4" diameter. (See Standard Detail G-05)

C. Setbacks and Clearances from other Utilities

All clearances listed below are from edge-to-edge of each pipe.

1. Clearances - Horizontal clearances from water mains

a. Cable TV	Minimum 3 feet
b. Gas	Minimum 3 feet
c. Power	Minimum 3 feet
d. Stormwater	Minimum 3 feet
e. Telephone, Fiber Optics	Minimum 3 feet
f. Sewer	10 feet

2. Vertical clearances from water mains

a. Cable TV	1 foot
b. Gas	1 foot
c. Power	1 foot
d. Stormwater	1 foot
e. Telephone, Fiber Optics	1 foot
f. Sewer	2 feet

3. For open channels, horizontal and vertical clearance requirements will be determined on a case-by-case basis.
4. Parallel Utilities - Check for crossing or parallel utilities. Avoid crossing at highly acute angles (the smallest angle measure between utilities should be between 45 and 90 degrees).
5. Utilities Coordination - Send a letter and preliminary plan to existing utilities to inform them of new construction. Request as-built information and incorporate into plans. At a minimum, the following utilities should be contacted: cable television, natural gas, power, sanitary sewer, telephone, water, and telecommunications companies.

5. CONSTRUCTION

A. General

Except as otherwise noted herein, all work shall be done in accordance with the Plans and Specifications approved by the City and as recommended in applicable American Water Works Association (AWWA) Specifications and/or the Washington State Chapter, American Public Works Association (APWA), and/or Washington State Dept. of Transportation (WSDOT) Standard Specifications for Road, Bridge, and Municipal Construction, and/or Issaquah Water Standards, and according to the recommendations of the manufacturer of the material or equipment used.

All construction covered by these standards shall conform to its specifications. In the event any other standard has been adopted by the City which conflicts with the Standard Specifications adopted in this section, the standard which better protects the public health, safety, and welfare as determined by the City shall control.

The City shall always have access to the work for the purpose of inspecting and testing, and the Contractor shall provide proper facilities for such access and such inspection and testing. If any work is covered up without approval or consent of the City, it must, if required by the City Engineer, be uncovered for inspection.

Necessary sanitation convenience for the use of workmen on the job, properly secluded from public observation, shall be provided, and maintained during the performance of the work.

Before commencing any construction work as described in the plans and specifications, the Contractor shall provide photographs of pre-existing conditions of the area that will be disturbed during construction operations. Photographs will be obtained as follows:

1. Every 25 feet interval in easements.
2. Every 50 feet interval in paved areas, and
3. Any other location as directed by the Engineer.

The photographs shall be taken with a high-resolution digital camera.

B. Underground Utilities

The plans shall show as accurately as possible locations of various existing utilities known to the Engineer, such as gas lines, water mains, sewer mains, storm drainage, power lines, telephone lines, television cables, and other obstructions based on information obtained from various sources. This information is not guaranteed to be accurate, and the Contractor is directed to check for interferences and obstructions by inquiry from the different utilities and by underground exploration ahead of his regular excavation.

The Contractor shall request field locates and notify the owners of underground facilities about the scheduled commencement of excavation through a One-Call number 811, 72 hours before construction for utility locations.

If the Utility is not included in the one-number locator service, notice shall be provided individually to those owners of underground facilities known to or suspected of having underground facilities within the area of proposed excavation.

Notice shall be made to owners of underground utilities not less than two (2) business days or more than ten (10) business days prior to scheduled date of commencement of excavation.

The Contractor shall excavate around and under utilities with special care and shall support and maintain them in service. Where it is necessary to cut, move or reconnect any utility lines, arrangements shall be made with the respective utility.

If a water main has been field marked as unlocatable and cannot be located by hand-digging or hydro excavator, the excavator must contact the City of Issaquah project inspector to arrange for an on-site meeting. City personnel will assess risk of damage and create a mitigation plan that may include throttling a water main or standing-by while reasonable care is taken in the continuance of work.

C. Site Maintenance

The Developer or Contractor shall schedule and control work so as to comply with the applicable provisions of the Right-of-Way Use Code and Procedures, Issaquah Municipal Code (IMC) such as; Chapter 12.12, and Chapter 16.26 Clearing, Grading, and Stormwater Management to prevent any hazards to public safety, health, and welfare.

Two-way traffic shall be maintained at all times on existing streets unless detour plans or temporary traffic control plans along with public notification has been approved in advance by the City Engineer.

Streets shall be kept free of dirt, mud, staining, rocks, and other debris on a continuous basis in conformance with the Right-of-Way Use Code & Procedures (12.12).

Pedestrian facilities, to and from the fronting of the site, shall be kept free of obstructions, safety hazards and continuity maintained at all times. Pedestrian routes must be secure for weekends and holidays.

Pedestrian and vehicular access to occupied buildings shall be maintained at all times except where prior approval from the building owner and City has been obtained.

Maintenance access shall be provided at all times to all existing City Utility appurtenances that require routine maintenance or emergency access.

Public or private utilities, driveways, roadways, pipelines, or other existing improvements, which are removed or disturbed in the course of the work, shall be restored to their original condition at the expense of the Developer or contractor performing the work. In cutting through established lawns or landscaping, the sod, trees, shrubs and/or groundcover shall be removed and preserved in a healthy condition before trenching or the contractor is responsible for replacing in kind. The lawn and/or landscaping shall be replaced after back filling with the preserved items or replaced with like materials to the satisfaction of the property owner or the City if in ROW. A signed release from the affected property owner will be required.

In the case of existing underground utilities, the developer shall ensure that access (valves, manholes, etc.) to said utilities is maintained at all times. Utility access covered by paving operations shall be immediately uncovered and then raised to grade within five (5) days. Unidentified utilities shall be raised to grade and brought to the attention of the City.

The construction site shall be kept clean during the progress of the work. Before the work shall be considered complete, the Contractor shall clean out ditches and pipes that may have been filled during

the work, replace damaged surfacing, remove surplus materials, and trash and dispose of brush, repair all damages, and otherwise leave the job in a neat, orderly, and workmanlike condition.

Protective fences (silt, tree protection, slope, wetland, native growth protection easements, limits of clearing) are to be installed to City Standard prior to clearing, grading, or excavating.

Where indicated on the Plans, a bright orange safety fence shall be placed parallel to the silt fence, 2 feet nearer to the construction activity. Top of fence shall be located 3 feet above ground. The fence shall be supported as recommended by the manufacturer and as directed by the Engineer.

The contractor shall apply water in the amounts needed at the locations necessary to provide adequate dust control. The contractor shall also maintain this control for the evening and weekends. Permission to draw water from a city fire hydrant must be granted by a permit available from the City of Issaquah Public Works Department (425) 837-3470.

The contractor shall use the appropriate pollution control measures to ensure that no liquid products or contaminated water (such as runoff from concrete slurry) enters the storm drainage system, surface waters, or otherwise leaves the project site. For appropriate best management practices, refer to the 2012/2014 Storm Water Management Manual for Western WA, Volume 4.

A Temporary Erosion & Sediment Control (TESC) preconstruction meeting shall be held before any work begins at the project site to review implementation of the TESC plans and confirm discharge NTU limit. The approved TESC plans shall be followed at all times, unless revisions are needed to address construction sequencing, changed site conditions, or unforeseen circumstances.

Any discharge to a stream, lake or wetland shall not exceed water quality standards per WAC 173-201A (as low as 5 NTU above background). Discharge above 25 NTUs to the City stormwater system requires notification to the TESC Supervisor, so that action can be taken to keep discharges below threshold levels. Discharge at or above 100 NTU requires notification to the City. Discharge from the project site shall not exceed the NTU limit at all times up to the 10 year/24-hour storm event. This event is defined as 3.5 inches of rainfall over a 24-hour period, as measured at the City's rain gage. Data from this rain gage is posted on the City's website

All work on easements shall be performed strictly in accordance with easement provisions. Easements shall be restored equal to or better than original condition. The Contractor shall do no work on easement areas until specifically authorized by the Engineer. A signed and written release from the easement grantor shall be furnished to the Utility Inspector prior to permit signoff.

D. Trench Dewatering

When water is encountered to a degree that a successful trenching and pipe laying operation is hampered, Contractor shall control the water in order to allow for the proper installation and backfilling of the pipe. Determination of the method to be used to dewater trenched areas will be the responsibility of the Contractor, but any method used must be in accordance with the specifications and requirements of the Washington State Department of Ecology and the City. Pumping any water off-site is not allowed without prior approval from the City of Issaquah. Discharges to the public stormwater drainage system must be below 100 NTU, and not considered a prohibited discharge (per IMC 13.28.025).

E. Trench Excavation

Trenches shall be excavated to the line and grade approved by the City to provide a minimum of thirty-six (36) inch cover over the pipe. Except for unusual circumstances where approved by the City, the trench sides shall be excavated vertically, and the trench width shall be excavated only to such widths as are necessary for adequate working space. The trench shall be kept free from water until jointing is complete. Surface water shall be diverted so as not to enter the trench. The Contractor shall maintain enough pumping equipment on the job to ensure that these provisions are carried out. Gravel required in the bottom of the trench due to action of weather or workers shall be furnished by the Contractor without expense to the City. Boulders, rocks, logs, roots and other obstructions shall be entirely removed or cut out to the width of the trench and to a depth six (6) inches below water main grade. Where material is removed from below water main grade, the trench shall be backfilled to grade with material satisfactory to the City and thoroughly compacted.

Excavation areas shall be backfilled or covered with steel plating by the end of each workday. Driveways shall not be blocked. Open trenches are not allowed overnight. Steel plates shall not be used over the weekend or during freezing weather.

Roadway paving shall be cut ahead of the trenching equipment to prevent excessive tearing up of the surfacing and to eliminate ragged edges.

Where the soil encountered in the bottom of the trench is unstable and unsuitable as a base for pipe, such soil shall be removed to a depth specified by the Engineer to provide uniform and stable bedding for the pipe.

Providing saw cutting, excavation, disposal, hauling, sheeting, shoring, cribbing, cofferdams, and all aspects involved therein shall be the sole responsibility of the Contractor.

F. Sheeting and Shoring

The Contractor shall provide and install sheeting and shoring as necessary to protect workers, the work, and existing buildings, utilities, and other properties in compliance with OSHA and WISHA requirements. All sheeting and shoring above the pipe shall be removed prior to backfilling. Removal of sheeting and shoring shall be accomplished in such a manner that there will be no damage to the work or to other properties.

G. Bury Depth

Water main shall have a minimum of 3’ cover and a maximum of 5’ unless approved by the City. Deeper cover than 4’ will require a tracer wire (see General Standard Detail G-02).

H. Pipe Laying

Ductile Iron pipe work shall be accomplished in accordance with AWWA Standard C600 and the manufacturer’s recommendations unless specifically contradicted by these Specifications. Special care shall be taken in handling pipe to avoid damaging ends, coatings and linings. Pipe shall be carried in slings and shall not be rolled or dragged. The pipe shall be examined for defects and damage while suspended before lowering into trench. Any damage shall be repaired before pipe is lowered into trench.

The pipe shall be cleaned of all foreign material before lowering into the trench. Whenever pipe laying is not in process, the last section of pipe shall be tightly capped or plugged.

I. Bedding, Backfill and Compaction

Selected backfill material shall be placed and compacted around and under the water mains by hand tools, unless otherwise approved by City, to a height of six (6) inches above the top of the water main. The remaining backfill shall be placed and compacted in layers not more than twelve (12) inches thick, except that under roadways all backfill material shall be placed in layers not more than six (6) inches thick, and mechanically compacted. If suitable backfill material, as determined by the City, is not available from trenching operations, the City may order the placing of pipe bedding (CSTC) around the water main, and common borrow for backfilling the trench.

The City may require that an independent laboratory be employed to perform in-place density tests as proof of compaction which meets these Specifications. All costs shall be borne by the Contractor.

Compaction of backfill and backfill procedures in public rights-of-way shall at the minimum conform to the requirements of the governmental agency having jurisdiction thereof.

Backfilling shall be compacted to ninety-five percent (95%) of maximum density in all areas where paved streets, shoulders, driveways, or sidewalks will be placed over the backfill and to eighty-five percent (85%) of maximum density in all other areas. Measurement of compaction density shall be in accordance with ASTM D-1557 Modified Proctor method.

When density tests are required by the City, the City will require that the services of an independent testing laboratory or county testing laboratory be employed to perform in-place density tests to ascertain whether the specified density can be or has been obtained, and the costs thereof shall be borne by the Developer. The maximum space between tests shall not exceed 100 linear feet.

Regardless of the approval by the City as to manner of compaction or testing, acceptance by the City or otherwise, the Contractor shall repair any settlement of trenches and excavations that may occur within one year after completion and acceptance of the work by the city.

J. Tunneling

Tunneling may be ordered by the City. Tunnels shall be not less than four (4) feet high and two (2) feet wide and not less than one (1) foot wider than the outside diameter of the pipe. Tunnels shall be backfilled with materials acceptable to the City and backfill shall be mechanically compacted.

The Contractor shall verify the vertical and horizontal location of existing utilities. If required to avoid conflicts and maintain minimum clearances, adjustment shall be made to the grade of the casing with approval from the City.

Boring pits shall be backfilled with select native or imported material and compacted to 95% maximum dry density as determined by ASTM D-1557. The contractor shall provide sufficient select backfill material to make up for any rejected material. All disturbed ground shall be restored to its original condition or better.

K. Highway Crossings

This item applies only to rigid surface pavements. The Contractor may use any method which provides satisfactory results and is acceptable to the governmental agency having control of the road and to the City, provided that the Contractor restores the roadway to its original condition. Normally, highway crossings require the placing of a steel, cast iron or concrete pipe casing by jacking or tunneling and

laying the water mains within this casing. In case of tunneling, subsequent low-pressure grouting through the pavement may be required.

L. Fire Hydrant Installation

Hydrant installation shall generally conform to AWWA Standard C600 unless specifically contradicted by the Standard Detail Fire Hydrant Assembly. Guard posts shall be installed where required by the City. Hydrant assembly shall be restrained with an approved system by the City. Pumper nozzle shall be fitted with 5-in. Storz hydrant adapter and cap.

An auxiliary gate valve shall be installed at the main line tee to permit the repair and replacement of the hydrant without disruption of service.

All hydrants shall stand plumb, be set to the finished grade with the lowest outlet of the hydrant no less than 18 inches above the grade and have no less than 36 inches in diameter of clear area about the hydrant for the clearance of hydrant wrenches on both outlets and on the control valve. All chains attached to caps shall be removed.

The pumper port shall face the street. Where the street cannot be clearly defined or recognized, the port shall face the most likely route of approach and location of the fire truck while pumping, all as determined by the Fire Marshal.

Hydrants shall not be obstructed by any structure or vegetation or have hydrant visibility impaired within a distance of 150 feet in any direction of vehicular approach to the hydrant. A “blue” reflector will be placed on the centerline of the roadway in line with all hydrants where appropriate.

Fire hydrant installations shall be adequately protected against vehicular damage, in accordance with standards and specifications promulgated by the appropriate water authority.

M. Blow-Off Assemblies

Blow-off assemblies shall be installed at the end of all dead-end lines. Blow-off assemblies shall conform to the Issaquah Standard Details or be approved by the City.

N. Valve Installations

Before installation, valves shall be cleaned of all foreign material as hereinbefore specified for installation of pipe. Such blocking as the City may deem necessary shall be provided. The valve and valve box shall be set plumb with the valve box centered on the valve. The top of the valve box shall be set to grade. Valve boxes shall be set flush with finished roadway pavement or sidewalk. For locations outside of the roadway pavement or sidewalk, an asphalt concrete pad (2' X 2' X 4") shall be placed around the valve box.

O. Concrete Blocking

Concrete Blocking with specified material shall be cast in place and be full size width bearing against the fitting and bearing area against undisturbed soil. Additional bearing area may be required by the City. Blocking shall bear against fittings only and shall be clear of joints so as to permit taking up or dismantling joints. Fittings shall be separated from concrete blocks with 8-mil plastic sheeting. Blocking shall be designed by a licensed civil engineer to withstand full test pressure as well as to continuously stand operating pressures under all conditions of service. Blocks shall be left exposed for inspection. Blocking will only be used where connections are made to existing water main, unless approved by the City.

P. Air and Vacuum Release Valve Installation

Combination Air Valves shall be of the single housing style that combines the operating features of both an Air Release valve and Air/Vacuum valve.

Location of the air and vacuum release valves as shown in the Plans is approximate. The installation shall be set at the high point of the line.

Q. Hydrostatic Tests

Prior to the acceptance of the work, the installation shall be subjected to a hydrostatic pressure test of 150 psi over static pressure at the high point in the line for a minimum of 15 minutes, before leakage measurement starts. It shall then be held at this pressure, without pumping, and any leaks or imperfections developing under said pressure shall be remedied by the Contractor before final acceptance of the work. Leakage shall be measured by approved means in the presence of the city. The Contractor shall provide all necessary equipment and shall perform all work connected with the tests. Tests shall be made after corporation stops and service lines are installed. Insofar as is practical, tests shall be made with pipe joints, fittings, and valves exposed for inspections. All valves within the section being tested shall be open. A temporary plug or blow-off assembly shall be installed at the end of the new main. This shall include restraint or blocking necessary to withstand pressures encountered during the hydrostatic test.

The quantity of water lost from the main shall not exceed the number of gallons per hour as determined by the formula:

$$L=(S*D*\text{sqrt } P)/266{,}400$$

in which

S = gross length of pipe tested, feet
D = nominal diameter of pipe, inches
P = test pressure during leakage test, psi

Typical leakage allowance:

Pipe Size	Allowable Leakage	Pipe Size	Allowable Leakage
4”	0.24	12”	0.71
6”	0.36	14”	0.83
8”	0.47	16”	0.95
10”	0.59	18”	1.07

Note: Allowable Leakage is gallons per hour per 1,000 ft of pipe base on test pressure of 250 psi.

R. Sterilization of Water Mains

Sterilization of new water mains shall be accomplished by the contractor following AWWA C651-14 standards and in accordance with the requirements of Washington State Department of Health (DOH).

Chlorine shall be injected to give a dosage of not less than 50 mg/l of available chlorine. If minimum is not met, contractor will continue process until requirement is attained. Injector will be provided by contractor. City will test for compliance collecting two samples for coliform analysis at least 16 hours apart or collecting two samples 15 minutes apart after at least a 16-hour rest period.

The Contractor shall be responsible for disposal of treated water flushed from mains and shall neutralize the wastewater for protection of aquatic life in the receiving water before disposal into any natural drainage channel.

S. Service Connections

Service installation shall be as shown on the Standard Details. Service taps will be a minimum of 18” from bell or spigot. If 2 or more are needed, then taps will be staggered 12” apart or as directed by City.

Service saddles are required on all pipe except class 52 or thicker ductile iron pipe and for taps larger than one (1) inch. When the main is twelve (12) inch diameter or larger, the saddle shall be a double strap type.

Reconnecting existing services, the service connections shall not be transferred to the new main until it has been successfully flushed, disinfected and satisfactory bacteriological sample results are obtained. When transferring services from the existing main to the new main, the Contractor shall take sanitary precautions to protect the potable water supply in both the existing and new mains.

T. Connections to Existing Pipelines

The Contractor shall provide to the City Engineer a request of utility shut-down a minimum of 10 working days in advance of the need of utility shut-down or connection. No shutdowns or connections shall occur on Fridays or the day after a City holiday. The Contractor shall notify impacted customers minimum of 2 working days in advance of interruption of water service.

Connection to the existing main shall take place only after the new main is flushed, disinfected, and satisfactory bacteriological sample results are obtained**.** Final flushing shall be monitored and accepted by City.

The Contractor shall ensure that all fittings are in accordance with the approved plans and that the connection can be made in accordance with the plans. The Contractor shall immediately notify the Engineer if the connection cannot be made in accordance with the plans.

When tapping existing main lines where service cannot be interrupted, the tap shall be made under pressure with tapping tee and valve assembly. Joints shall be tested using normal test pressure prior to start of tapping existing main. City shall determine where tapping under pressure is required.

Where cut-ins are to be made in existing mains, the work shall be conducted at a time specified by City and in such a manner as to minimize the interruption of service. Necessary pipe, fittings and valves shall be assembled at the site ready for installation prior to the shutting off of water in the existing main. Once the water has been cut off, the work shall proceed continuously without interruptions and as rapidly as possible until completed.

Maximum 8-hour shutdown, and no more than one shut down in a 24-hour period.

Contractor shall not operate any valves, including fire hydrant valves, in any part of the City's water system, except in the presence of the City. Contractor shall notify the City 24-hours in advance of need to operate valves.

U. Painting

Exposed parts above ground shall be painted as follows:

- Hydrants will be factory white, no repaint allowed (See Standard W-02)
- Guard Post will have one coat primer and one coat paint (See Standard W-03)
- Blow Offs will have one coat primer and one coat paint (See Standard W-04)
- Air Vac will have one coat primer and one coat paint (See Standard W-07)
- Post(s), pipe, and fittings must be cleaned, scuffed, sanded, prepared, and painted per paint manufacturer specification.
- Each paint coat will be 6 mils thick.
- See Approved Materials List for primer and paint.
- Distance to valve shall be stenciled in black two (2) inch letters on the hydrant and valve marker. (See Standard Details)

APPENDIX A - Record Drawing Requirements And Drafting Standards

RECORD DRAWING REQUIREMENTS

Record drawings are required for all construction projects conducted in the City of Issaquah. All Record drawings must be stamped and dated by both a State of Washington Registered Engineer and Surveyor. Record drawing drawings are required prior to request for final inspection and issuance of Certificate of Occupancy.

The following Record Drawing requirements are intended to provide a minimum guide to the engineer of record and should be used along with good engineering practices.

Each sheet of the Record drawing plans shall include the following statement along with the engineer's professional stamp, signed and dated, located at the bottom right-hand corner of the sheet when possible:

> "These plans are Record Drawings and the information shown accurately
> reflects existing field conditions as of this date: _____"

GENERAL:

The Record Drawing Plans should consist of the design plans submitted, approved, and permitted for the construction project. The information shown shall reflect the actual construction completed under the permit with any and all deviations from the design plans. The modified design plans shall not have cross outs.

Horizontal and vertical datum to be used are NAD 83/91 and NAVD 88. Tie monumentation to at least two recognized and approved City monuments on or off site, with x, y, z coordinates for each. AutoCAD drawings are to be drafted utilizing this datum for insertion into the City base maps.

Each utility shall be shown on separate sheets with detailed information. In addition, a composite with all utilities shown together, without detailed information, and focusing on utility crossings, is required. If the project has very limited utility information, request for approval for a composite only with all detailed information may be submitted to the City's Project Manager.

The layering convention and plans symbols shall follow established standards as indicated by the American Public Works Association, Washington State Chapter.

Draft record drawings are to be submitted prior to sending hard copies. Final record drawings shall be in digital format and include one "D" size mylar copy . The digital format shall include PDF and AutoCAD ".dwg" files, latest version, submitted electronically (details will be provided when record drawings are ready for submittal). The electronic file shall include all plans, profiles, notes, and details and properly labeled with project and drawing names.

WATER:

Record drawing information for water should include, but not be limited to:

Location of all valves, tee junctions, bends, blocking, size of meters, hydrants, pressure reducing stations, and blow-offs.

Sizes, type, and lengths should be shown.

Water Lines - Material, lengths, sizes, and location.

Water Valves - Location, type, size

Water Bends - Location, size, type, blocking

Water Main Blocking - Location

All Fittings - Reducers, Expanders, Sleeves, etc.

Fire Hydrants – Locations w/ valves

Blow-off - Locations and sizes of blow offs and valves

Air & Vacuum Relief Valve - Locations, Size, Valves

Pressure Reducing Valves - Locations and valving, bends, all fittings outside vault

Water Meters – Type, size, and locations (Domestic, Irrigation, Fire)

Water Services - Size, locations, material

Utility Easements - Locations, widths, and recording numbers

Details of Connections

Fire Sprinkler Connections - Locations of line, size of line, type, location of detector vault, location of service valve

Any and all unusual fittings or installations deemed applicable by City Inspector/Reviewer

WATER LAYER LIST

LAYER NAME	COLOR	DESCRIPTION
WA-*size/type* (see below for List of pipe types)	BLUE	All sizes and types of water pipes. A different layer for each size and type. For example: WA-8DI = 8” ductile iron or WA-12CI = 12” cast iron.
WA-TEXT	WHITE	Size and Type of each water pipe.
WA-DESC	WHITE	All other wording besides size & type. This will include all descriptions.
WA-ESMT**	WHITE	Public utility easements
WA-WMET	BLUE	Water meters and water service lines.
WA-VALV	BLUE	All water valves
WA-FHYD	BLUE	All fire hydrants
WA-FIRE	BLUE	All fire sprinkler line connections
WA-FTNG	BLUE	All fittings (bends, blocking, blow offs, PRV, air & vacuum valves, etc.)
ABANDONED	YELLOW	All abandoned lines (size & type will be under WA-TEXT layer, if we have it)
*AC-PIPE	RED	Will be just for the lightning bolt symbol placed over each AC pipe.

*Layers for internal city use only
**Linetype should be Hidden2

Water Pipe types (size of pipe will precede type abbreviation):

DI = ductile iron CI = cast iron CO = copper STL = steel PVC = pvc pipe

HDPE = High Density Polyethylene Pipe

Additional Information:

Linetype = continuous; Lineweight = default

Any additional abbreviated layers will be accompanied by description

APPENDIX B - Approved Materials List (February 2022)

DESCRIPTION	MAKE AND MODEL	DOMESTIC SOURCE	"REQUIRED" NO SUBSTITUTIONS	OR EQUIVALENT (submittals required)	REFERENCE
Above Ground Enclosures	Hot Box/Heated			X	**UL Approved & AWWA Approved**
Air Release/ Vacuum Valves	APCO 140C		X		
All Thread	¾" 316 Stainless Steel		X		
All Thread Nuts	¾" 316 Stainless Steel				
Basket Strainer	Cla-Val H Style Strainer		X		
Block and Bleed Valve	Siemens 7MF9011-4FA		X		
Casing End Seals	APS AC End Seal		X		**Water**
Casing Spacers	APS #SSI Uniflange #UFRCS 1300			X	**Water**
Check Valves (Swing Check)	Cla-Val AVK	X	X		**AWWA: C-508**
Class 52 Cement Lined Ductile Iron 3" & Larger		X	X		**AWWA: C-151 Minimum Thickness Class 52**
Cement Lined Ductile Iron Fittings		X	X		**AWWA: C-110/C-111**
Couplings for AC Pipe	Romac Macro HP Romac XR-501 (Epoxy coated and stainless hardware)	X	X		
Couplings for Ductile Iron Pipe	Romac Alpha	X	X		

DESCRIPTION	MAKE AND MODEL	DOMESTIC SOURCE	"REQUIRED" NO SUBSTITUTIONS	OR EQUIVALENT (submittals required)	REFERENCE
Ductile Iron Pipe Restrained Joint Gasket	Barracuda Orange Field Loc 350 Romac Piranha McWane Sure Stop 350 American Pipe Co. Fast Grip	**X**	**X**		**Gasket and pipe manufacturer shall match**
Fire Hydrants	Mueller 423-540627* AVK 27SM-A2906-0DKJA-GD* East Jordan 71439D* *Part Numbers are for 4' bury depth. See Appendix C for complete part number list	**X**	**X**		
Flanged Gaskets	Full Face 1/8" thick red rubber *May at times come in black	**X**			
Gate Valves	AVK – 45 Mueller – A2362 East Jordan (EJ) – Flowmaster	**X**	**X**		**AWWA: C-509 (CI); C-515 (DI)**
Gauges, Liquid Filled	Span LFS-410 WIKA Type 213.53			**X**	
Grooved Coupling Flange Adapter	Victaulic 341 Coupling		**X**		**AWWA: C-606**
Ladder Up Post	Bilco-Ladder Up Post, LU-4			**X**	**Water**

DESCRIPTION	MAKE AND MODEL	DOMESTIC SOURCE	"REQUIRED" NO SUBSTITUTIONS	OR EQUIVALENT (submittals required)	REFERENCE
Locate Wire	Copper Clad Steel (CCS) 10 AWG HMWPE, blue colored jacket			X	**Water**
Neoprene Foam Pad	DOW Plastics Ethafoam 220			X	
Paint Primer Grey	Sherwin Williams Pro-Cryl Universal Primer Medium Grey B66A01320		X		
Paint Topcoat White	Sherwin Williams Sher-Cryl HPA High Performance Acrylic Gloss Extra White B66W00311		X		
Pressure Reducing Large Valve	Cla-Val 92G-01 BCVKC with epoxy and stainless trim	X	X		
Pressure Reducing Small Valve	Cla-Val 90G-01 ABSVKC with epoxy and stainless trim	X	X		
Pressure Relief Valve	Cla-Val 50A-010 BKC epoxy and stainless trim	X	X		
Pressure Transducer	Siemens SITRANS P DSIII/410		X		
Repair Clamps	Romac SS1 or SS2	X	X		
Restrained Joints – 3" or greater followers	Ebba Iron Mega Lug Romac Roma Grip Romac Grip Ring Star Stargrip 3000	X	X		**UL Listed and FM Approved**

DESCRIPTION	MAKE AND MODEL	DOMESTIC SOURCE	"REQUIRED" NO SUBSTITUTIONS	OR EQUIVALENT (submittals required)	REFERENCE
Sample Stations	Kupferle Eclipse #88-SS	X	X		
Stanchions	Standon Model S92			X	
Tapping "T's"	Romac SST/FTS 420	X	X		
Valve – Automatic Drain	Weathermatic 910			X	**W-04 & W-07**
Valve Box Base	EJ 85556024U	X	X		
Valve Box Top	EJ 85557016U	X	X		
Valve Box Water Lid	EJ 6800001	X	X		
Vault Ladder	Aluminum Stainless Galvanized			X	
Vault Lid: Double-Leaf Full Open Weather tight, spring or shock assist, recessed pad lock hasp, HS-20 rated, stainless steel trim, aluminum frame and access doors	LW Products, East Jordan (HHS or HHD rated if subject to traffic)	X	X		**Water**
Vault Penetration Seals	Link Seal Type C w/ 316 Stainless Steel Hardware		X		**Water**
Victaulic 31 Vic-Ring Coupling	Victaulic 31 Vic-Ring Coupling		X		
Victaulic 341 Flange Adaptor	Victaulic 341 Flange Adaptor		X		
Water Brass	Schedule 40 - Lead Free	X			
Water Copper Tubing	Type K Soft Copper Lead Free			X	

DESCRIPTION	MAKE AND MODEL	DOMESTIC SOURCE	"REQUIRED" NO SUBSTITUTIONS	OR EQUIVALENT (submittals required)	REFERENCE
Water Corporation Stop ¾"	Ford FB1700-3-NL Mueller B-20046N	X	X		**For use with W-23 ONLY**
Water Corporation Stop 1"	Ford FB1000-4-Q-NL Mueller B25008N	X	X		
Water Corporation Stop 1-1/2"	Ford FB-400-6-NL Mueller B-2996N	X	X		
Water Corporation Stop 2"	Ford FB-400-7-NL Mueller B2996N	X	X		
Water Coupling 1" x 3/4"	Ford C84-34-Q-NL Mueller H-15428N	X	X		**W-20A-D**
Water Coupling 1-1/2"	Ford C84-66-Q-NL Male C14-66-Q-NL Female Mueller H-15451	X	X		
Water Coupling 2"	Ford C84-77-Q-NL Male C14-77-Q-NL Female Mueller H-15451	X	X		
Water Curb Stop Ball Valve 1-1/2"	Ford B11-666-NL	X	X		
Water Curb Stop Ball Valve 2"	Ford B11-777-NL	X	X		
Water Meter 3" or Larger	Sensus Omni C2 CCF with 12' touch read wires	X	X		
Water Meter 1-1/2" to 2"	Sensus Omni C2 CCF	X	X		
Water Meter ¾" to 1"	Sensus I-Perl CCF	X	X		

DESCRIPTION	MAKE AND MODEL	DOMESTIC SOURCE	"REQUIRED" NO SUBSTITUTIONS	OR EQUIVALENT (submittals required)	REFERENCE
Water Meter Adapter 5/8"x3/4" to 1"	Ford A24-NL	X	X		
Water Meter Box ¾" and 1"	DFW Plastics DFW1324CNP4-18 BODY DFW1324SL-4MA2 LID	X	X		
Water Meter Box 1-1/2" and 2"	DFW Plastics DFWB40CNP4-S25-4MA2 *includes 2 boxes and a lid	X	X		
Water Meter Setter ¾"	Ford VBH92-15W-4M-43ZA-Q-NL Mueller 239B25804R2-03N	X	X		
Water Meter Setter 1"	**Vertical Inlet** Ford VBH94-15W-4M-44ZA-Q-NL Mueller 391B25804R2-01N **Horizontal Inlet** Ford VBH94-15W-4M-44AQ-NL	X	X		
Water Meter Setter 1-1/2"	Ford VBH86-12B-11-66-NL Mueller B-2427-2	X	X		
Water Meter Setter 2"	Ford VBH87-12B-11-77-NL	X	X		
Water Polyethylene Pipe	Copper Tube Size			X	
Water Service Saddle	Romac 101NS, 202NS SS1 (AC)	X	X		
Wire Splices	3M D8Y		X		

DESCRIPTION	MAKE AND MODEL	DOMESTIC SOURCE	"REQUIRED" NO SUBSTITUTIONS	OR EQUIVALENT (submittals required)	REFERENCE
Removable steel bollard	Traffic Guard RLP4		**X**		**G-04A**
Fixed steel bollard	Traffic Guard Embedded RFP		**X**		**G-04A**

APPENDIX C - Spec'd Fire Hydrant Part Numbers

Part numbers for 3' thru 7' bury depth fire hydrants:

Mueller Factory Part Number

- 3' 423-541992
- 3'6" 423-540908
- 4' 423-540627
- 4'6" 423-540909
- 5' 423-540910
- 5'6" 423-540911
- 6' 423-540912
- 6'6" 423-540913
- 7' 423-540914

AVK Factory Part Number

- 3' 27SM-A2904-0DKJA-GD
- 3'6" 27SM-A2905-0DKJA-GD
- 4' 27SM-A2906-0DKJA-GD
- 4'6" 27SM-A2907-0DKJA-GD
- 5' 27SM-A2908-0DKJA-GD
- 5'6" 27SM-A2909-0DKJA-GD
- 6' 27SM-A2910-0DKJA-GD
- 6'6" 27SM-A2911-0DKJA-GD
- 7' 27SM-A2912-0DKJA-GD

East Jordan Factory Part Number

- 3' 70339D
- 3' 6" 70439D
- 4' 71439D
- 4' 6" 72639D
- 5' 73439D
- 5' 6" 74439D
- 6' 75439D
- 6' 6" 76439D
- 7' 77439D

NOTE: All foot valves should match brand for brand of fire hydrant. Mueller with Mueller, AVK with AVK or East Jordan with East Jordan. No mixing brands. All will have stainless steel stems and bolts.

APPENDIX D - Water Standard Details Index

(NOTE: ANY CONFLICTS OR INCONSISTENCIES BETWEEN THESE DETAILS AND THE GENERAL PROVISIONS OR TECHNICAL SPECIFICATIONS, THE DETAILS SHALL TAKE PRECEDENCE.)

DESCRIPTION	DETAIL NO.
TYPICAL HORIZONTAL CONCRETE BLOCKING	W-01
FIRE HYDRANT ASSEMBLY	W-02
GUARD POST	W-03
BLOW-OFF ASSEMBLY	W-04
FILLING AND FLUSHING NEW WATER MAINS	W-05
PIPE LAYING DETAIL	W-06
AIR VACUUM RELEASE VALVE ASSEMBLY	W-07
TAPPING TEE	W-08
¾” AND 1” WATER METER SERVICE FOR DOMESTIC, IRRIGATION AND FIRE	W-09
1-½” AND 2” WATER METER SERVICE	W-10
3” AND LARGER METER INSTALLATION	W-11
SAMPLING STATION	W-12
FIRE SYSTEM SCHEMATICS	W-13
2- ½” AND LARGER DOUBLE CHECK DETECTOR ASSEMBLY (DCDA)	W-14
2- ½” AND LARGER REDUCED PRESSURE DETECTOR ASSEMBLY FOR HIGH HAZARD FIRE SPRINKLER ASSEMBLY (RPDA)	W-15
½” – 2” DOUBLE CHECK VALVE ASSEMBLY (DCVA)	W-16
2 -½” – 10” DOUBLE CHECK VALVE ASSEMBLY (DCVA)	W-17
½” – 2” REDUCED PRESSURE BACKFLOW ASSEMBLY (RPBA)	W-18
2 -½” AND LARGER REDUCED PRESSURE BACKFLOW ASSEMBLY (RPBA)	W-19
STANDARD PRESSURE REDUCING STATION CONFIGURATION “A”	W-20A
STANDARD PRESSURE REDUCING STATION CONFIGURATION “B”	W-20B
STANDARD PRESSURE REDUCING STATION CONFIGURATION “C”	W-20C
STANDARD PRESSURE REDUCING STATION CONFIGURATION “D”	W-20D
WATER VALVE BOX AND WATER VALVE EXTENSION INSTALLATION	W-21
TYPICAL A.C. WATER MAIN CROSSING REPLACEMENT DETAIL	W-22
PRESSURE TRANSDUCER	W-23
PRIVATE PRESSURE REDUCING VALVE ASSEMBLY	W-24

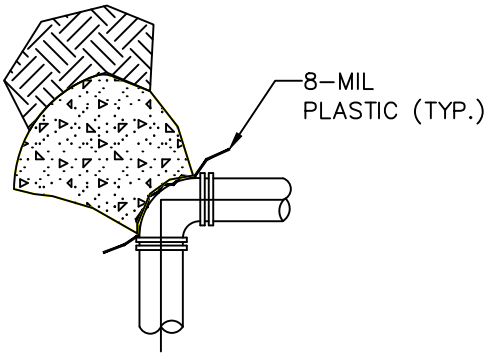

90° BEND

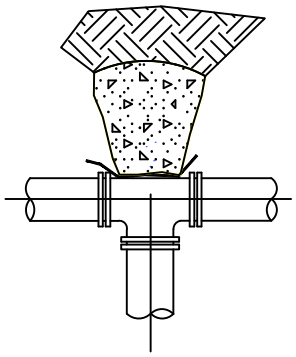

TEE

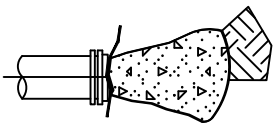

CAP

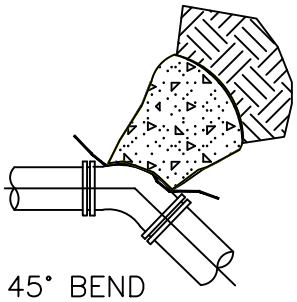

45° BEND

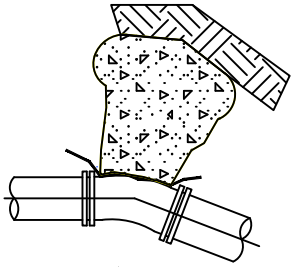

22 1/2° BEND

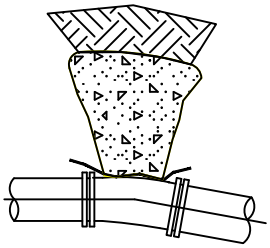

11 1/4° BEND

THRUST BLOCK – TABLE						
		MINIMUM BEARING AREA AGAINST UNDISTURBED SOIL "SQUARE FEET"				
PIPE SIZE	PRESSURE PSI	90°	45°	22 1/2°	11 1/4°	TEE/ CAP
4"	300	8	4	3	1	6
6"	300	18	10	5	3	13
8"	300	32	18	9	5	23
10"	300	50	27	14	7	36
12"	300	72	39	20	11	51
THIS TABLE IS PROVIDED AS A MINIMUM GUIDELINE ONLY. ALL BLOCKING SHALL BE DESIGNED AND STAMPED BY A LICENSED CIVIL ENGINEER.						

* TABLE CALCULATED AT 1000 LB/SF BEARING AREA. BY THE CITY.
* IN SOFT SOIL OR PEAT, PIPE RESTRAIN SHALL BE DESIGNED BY LICENSED ENGINEER AND APPROVED
* SAFETY FACTOR = 1.5

NOTES

1. ALL BLOCKING SHALL BE DESIGNED AND STAMPED BY A LICENSED CIVIL ENGINEER.
2. BLOCKING SHALL CONSIST OF A MINIMUM 3,000 PSI READY MIX CONCRETE WITH 6" MAXIMUM SLUMP.
3. CONCRETE BLOCKING SHALL BE CAST IN PLACE AND BE FULL SIZE WIDTH BEARING AGAINST THE FITTING.
4. BLOCK SHALL BEAR AGAINST FITTING ONLY AND SHALL BE CLEAR OF JOINTS TO PERMIT TIGHTENING OR DISMANTLING JOINT.
5. 8-MIL PLASTIC INSTALLED BETWEEN PIPE AND CONCRETE.
6. VERTICAL BLOCKING SYSTEMS REQUIRE SPECIAL DESIGN BY A LICENSED CIVIL ENGINEER.
7. BLOCKING SHALL ONLY BE USED WHEN CONNECTIONS ARE MADE TO EXISTING WATER MAIN, UNLESS APPROVED BY THE CITY.

CITY OF ISSAQUAH WASHINGTON

ROBERT J. YORK STATE OF WASHINGTON 19576 REGISTERED PROFESSIONAL ENGINEER

TYPICAL HORIZONTAL CONCRETE BLOCKING

DATE: **5/18/2022**

SCALE: **NTS**

STANDARD DETAIL NO.

W-01

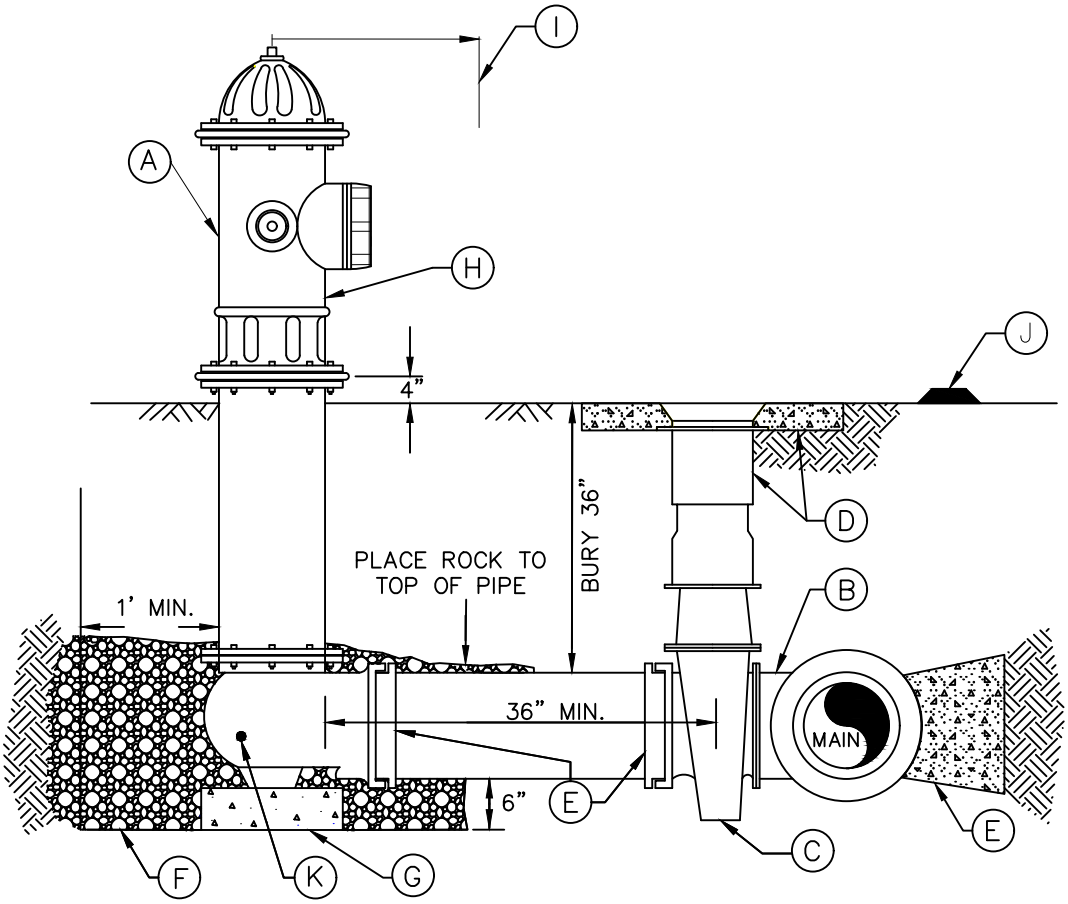

LEGEND:

A. AVK 27SM-A2906-0DKJA-GD, MUELLER 423-540627 OR EAST JORDAN 71439D. NOTE: THE PART NUMBERS SPECIFIED ARE FOR A 4' BURY DEPTH. PART NUMBERS WILL CHANGE WITH DIFFERENT HYDRANT BURY DEPTHS. PUMPER PORT TO FACE STREET OR AS DIRECTED BY THE FIRE DEPARTMENT.
B. FLANGE OUTLET ON DUCTILE IRON TEE OR SEE STANDARD DETAIL W-08 (TAPPING TEES).
C. 1-AUXILLARY GATE VALVE-AVK SERIES 45 RESILIENT SEAT GATE VALVE WITH STAINLESS STEM AND DIRT SEAL, MUELLER A2362 RESILIENT SEAT GATE VALVE WITH STAINLESS STEM AND DIRT SEAL OR EAST JORDAN FLOWMASTER RESILIENT SEAT GATE VALVE WITH STAINLESS STEM AND DIRT SEAL, M.J.xFL. WITH LUGS. DO NOT MIX PARTS BETWEEN AVK, MUELLER OR EAST JORDAN. SEE APPROVED MATERIAL LIST.
D. 1-TWO PIECE CAST IRON VALVE BOX. SEE STANDARD DETAIL W-21 (VALVE BOX INSTALLATION).
E. 1-6" DUCTILE IRON CLASS 52 CEMENT-LINED PIPE, LENGTH UP TO 50'. OVER 50', 8" CLASS 52 DUCTILE IRON IS REQUIRED. RESTRAIN PIPE WITH APPROVED SYSTEM - SEE APPROVED MATERIAL LIST OR STANDARD DETAIL W-01 (TYPICAL HORIZONTAL CONCRETE BLOCKING MAY ONLY BE USED WHEN CONNECTING TO AN EXISTING WATER MAIN, UNLESS APPROVED BY THE CITY).
F. ½ YARD WASHED DRAIN ROCK (⅞"), PLACE TO TOP OF PIPE. PLACE GEO FABRIC AROUND TOP AND SIDES OF GRAVEL, DO NOT BLOCK DRAIN HOLES. DEEPER EXCAVATION WITH MORE DRAIN ROCK MAY BE REQUIRED IN POOR DRAINING SOILS.
G. 16"x8"x4" MINIMUM SIZE CONCRETE BLOCK UNDER HYDRANT.
H. FOOTAGE TO VALVE STENCILED ON HYDRANT IN 2" BLACK BLOCK ENAMEL NUMBERS TO THE NEAREST FOOT. LETTERS SHALL FACE HYDRANT VALVE.
I. MINIMUM 3' CLEAR, LEVEL AREA AROUND HYDRANT.
J. TWO WAY 4" SQUARE RAISED PAVEMENT MARKER BLUE. PLACE 4" OFF STREET CENTERLINE - HYDRANT SIDE.
K. DRAIN HOLE

NOTES:

1. HYDRANTS AND VALVES SHALL BE FROM THE SAME MANUFACTURER.
2. HYDRANT SHALL BE VERTICAL (PLUMB).
3. EXTENSION KITS ARE NOT ALLOWED.
4. HYDRANT WILL COME FACTORY WHITE FURNISHED WITH 5" STORZ CONNECTION. NO REPAINTS. ALLOW 6-8 WEEKS LEAD TIME FROM THE FACTORY.
5. TORQUE ALL BOLTS TO MANUFACTURE SPECIFICATIONS.

CITY OF ISSAQUAH WASHINGTON	ROBERT J. YORK STATE OF WASHINGTON 19576 REGISTERED PROFESSIONAL ENGINEER	**FIRE HYDRANT ASSEMBLY**	DATE: **5/18/2022**	STANDARD DETAIL NO.
			SCALE: **NTS**	**W-02**

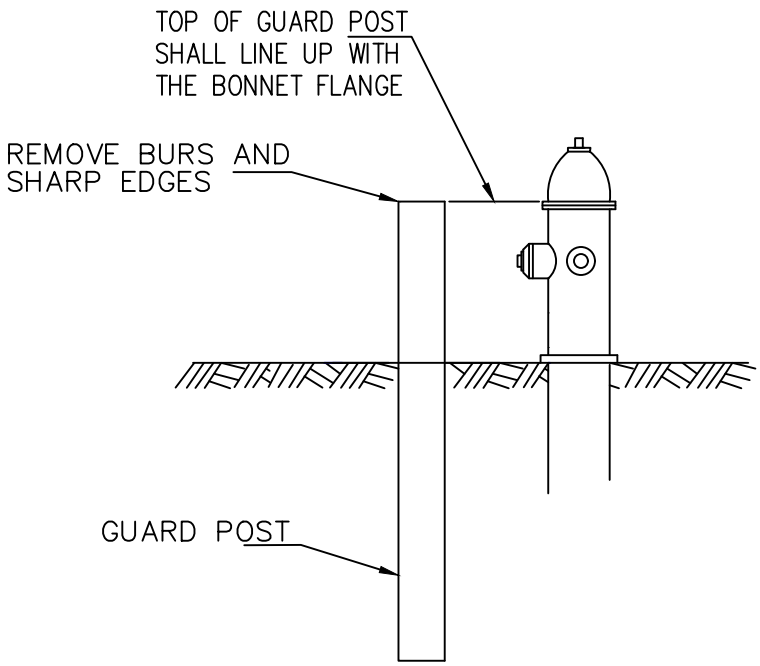

ELEVATION FOR HYDRANT

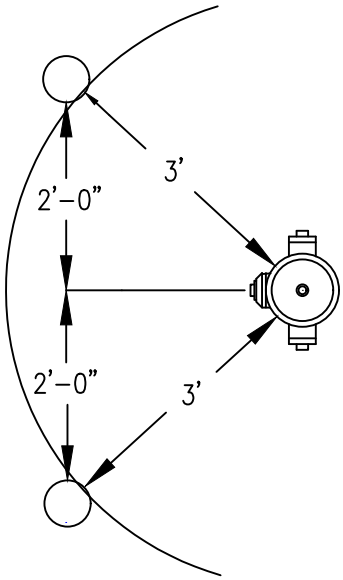

PLAN

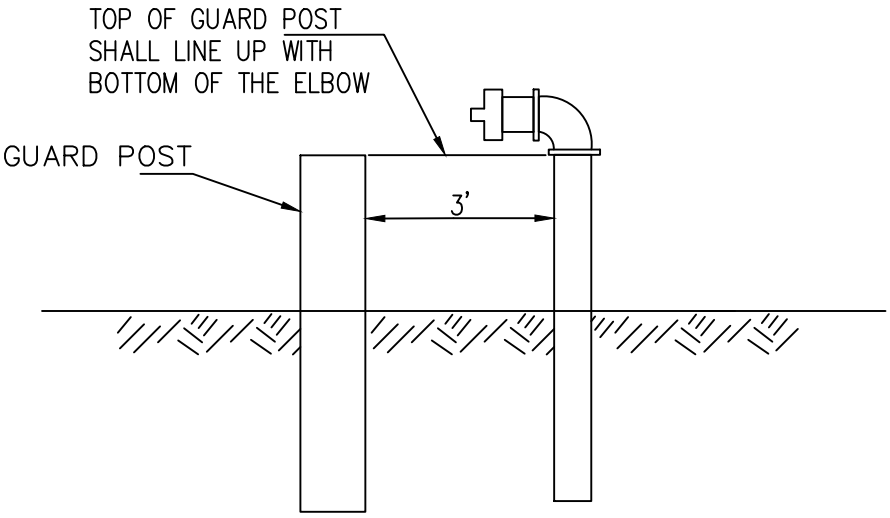

ELEVATION FOR BLOW-OFF

NOTES:

1. GUARD POST SHALL BE 6" CLASS 52 D.I. PIPE, 6' LONG, FILLED WITH CONCRETE.
2. GUARD POST MUST BE CLEANED, SCUFFED/SANDED, PREPARED AND PAINTED PER PAINT MANUFACTURER SPECIFICATION. SEE APPROVED MATERIALS LIST FOR PRIMER AND PAINT.
3. D.I. GUARD POSTS SHALL ONLY BE USED WHERE REQUIRED BY THE CITY ENGINEER.
4. 6"X8" PRESSURE TREATED WOOD POSTS WITH A 3" DRILLED HOLE MAY BE USED NEAR TRAFFIC WITH APPROVAL OF THE CITY ENGINEER.

CITY OF ISSAQUAH WASHINGTON	ROBERT J. YORK STATE OF WASHINGTON 19576 REGISTERED PROFESSIONAL ENGINEER	**GUARD POST**	DATE: **5/18/2022**	STANDARD DETAIL NO.
			SCALE: **NTS**	**W-03**

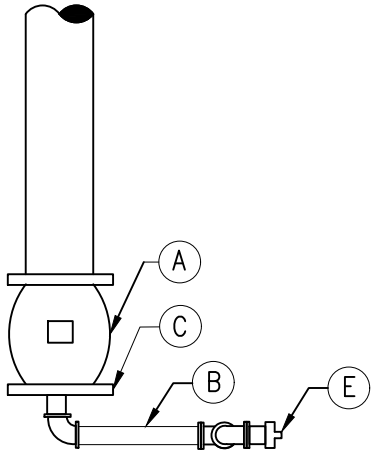

END CONNECTION PLAN VIEW

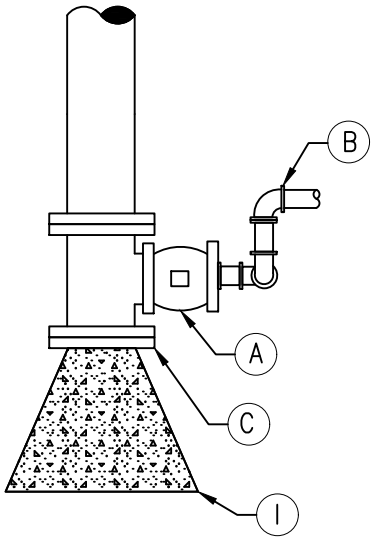

SIDE CONNECTION PLAN VIEW

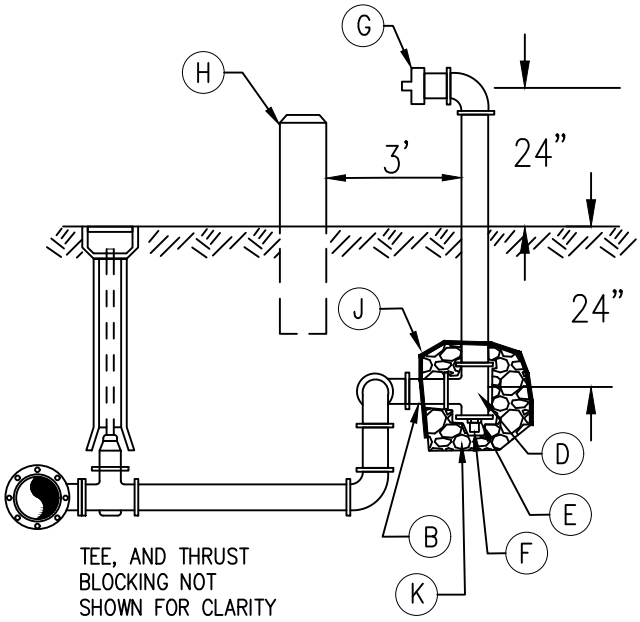

TEE, AND THRUST BLOCKING NOT SHOWN FOR CLARITY

ELEVATION VIEW

MAIN SIZE	QUANTITY	BLOW-OFF SIZE
6	1	4"
8	1	4"
10	1	F.H.
12	1	F.H.
≥16	PIG	4"

LEGEND:

A. CAST IRON GATE VALVE, MAIN SIZE x BLOW-OFF SIZE TEE (SEE APPROVED MATERIAL LIST).
B. BRASS OR DUCTILE IRON PIPE.
C. BLIND FLANGE OR M.J. PLUG x SIZED BLOW-OFF PIPE.
D. 2" X 2" TEE
E. 2" X 1/2" BUSHING
F. AUTOMATIC DRAIN VALVE – WEATHERMATIC 910
G. INSTALL BRASS, 4" FEMALE SEATTLE STANDARD THREAD X 2 ½" MALE NATIONAL STANDARD THREAD FITTING. INSTALL 2 ½" CAP NST.
H. GUARD POSTS WHEN REQUIRED. SEE DETAIL W-03.
I. SEE W-01 TYPICAL HORIZONTAL CONCRETE BLOCKING. ONLY USED WHEN CONNECTING TO EXISTING UNRESTRAINED WATER MAIN.
J. PROVIDE GEO-FABRIC AROUND TOP AND SIDES OF ROCK.
K. PLACE ⅓ YARD OF ⅞" WASHED ROCK. DEEPER EXCAVATION WITH MORE DRAIN ROCK MAY BE REQUIRED IN POOR DRAINING SOILS,

NOTES:

1. SEE STANDARD DETAIL W-21 (VALVE BOX INSTALLATION).
2. LOCATION OF BLOW-OFF TO BE DETERMINED BY CITY.
3. 2" BLOW-OFF SHALL BE INSTALLED ON ALL FUTURE STUBS.
4. TORQUE ALL BOLTS TO MANUFACTURE SPECIFICATIONS.
5. STENCIL FOOTAGE TO VALVE ON DISCHARGE PIPE. 2" BLACK BLOCK ENAMEL NUMBERS.
6. PAINT ALL ABOVE-GROUND PIPE, FITTINGS AND GUARD POST(S) WHITE. BLOW-OFF ASSEMBLY MUST BE CLEANED, SCUFFED/SANDED, PREPARED AND PAINTED PER PAINT MANUFACTURER SPECIFICATION. SEE APPROVED MATERIALS LIST FOR PRIMER AND PAINT.
7. HYDRANT ASSEMBLIES MAY BE SUBSTITUTED FOR BLOW-OFF ASSEMBLIES. SEE STANDARD DETAIL W-02 (FIRE HYDRANT ASSEMBLY).
8. VALVE SHALL BE LOCATED AT LEAST 3' FROM GUARD POST OR STAND PIPE.
9. ALL JOINTS AND FITTINGS SHALL USE RESTRAINED JOINT SYSTEMS. SEE APPROVED MATERIAL LIST.

CITY OF ISSAQUAH WASHINGTON

ROBERT J. YORK STATE OF WASHINGTON 19576 REGISTERED PROFESSIONAL ENGINEER

BLOW-OFF ASSEMBLY

DATE: **5/18/2022**

SCALE: **NTS**

STANDARD DETAIL NO.

W-04

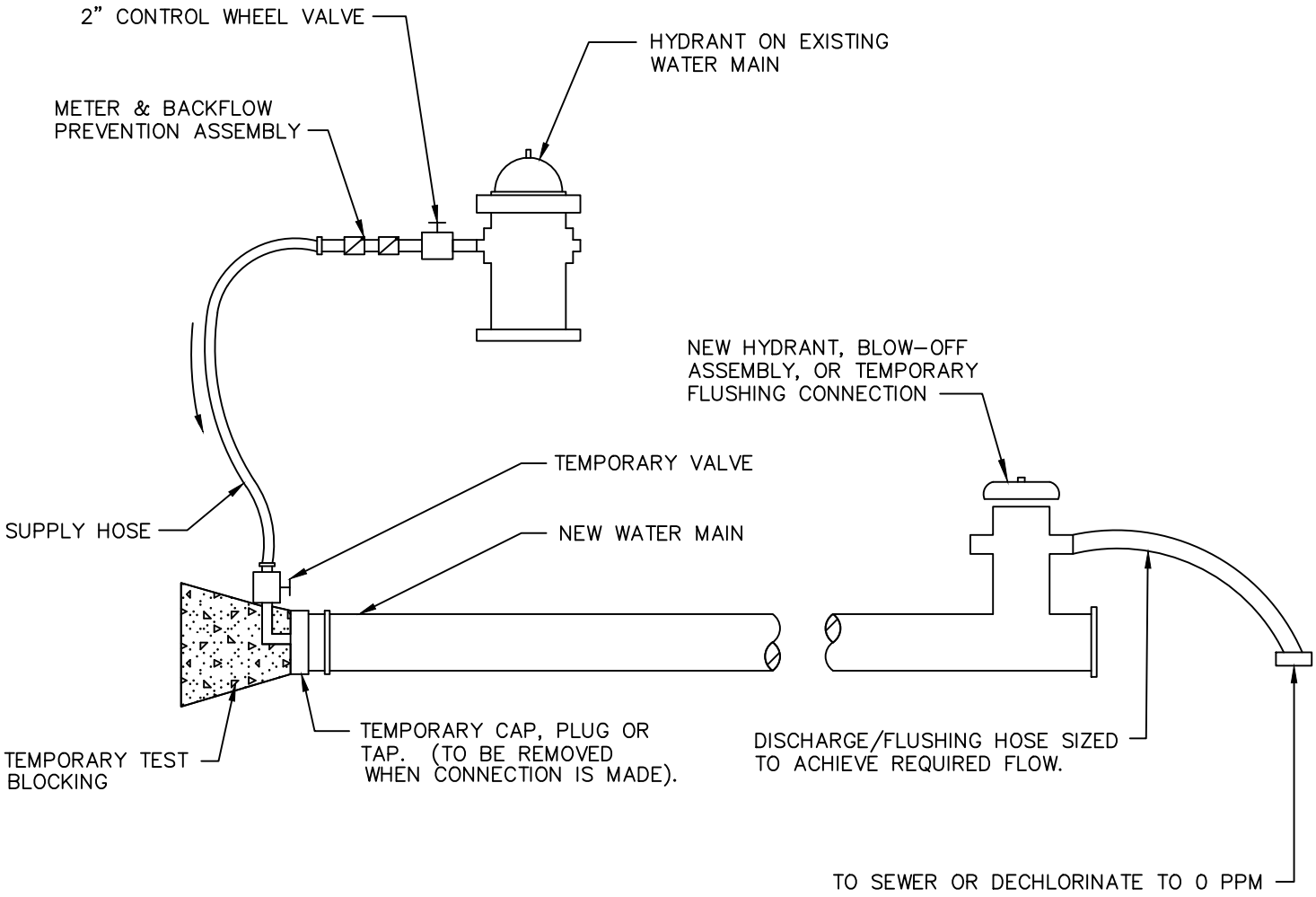

NOTES

1. AN APPROVED BACKFLOW PREVENTION ASSEMBLY SHALL BE INSTALLED BETWEEN THE EXISTING AND NEW WATER MAIN DURING DISINFECTION AND FLUSHING OF NEW WATER MAIN. (OBTAINED FROM ISSAQUAH PUBLIC WORKS OPERATIONS).
2. THE BACKFLOW PREVENTION ASSEMBLY AND SUPPLY HOSE MUST BE DISCONNECTED DURING HYDROSTATIC PRESSURE TESTING OF THE NEW MAIN.
3. THE NEW WATER MAIN SHALL BE CONNECTED TO THE EXISTING SYSTEM ONLY AFTER NEW MAIN IS PRESSURE TESTED, FLUSHED, DISINFECTED AND SATISFACTORY BACTERIOLOGICAL SAMPLE RESULTS ARE OBTAINED.
4. FOR DISINFECTION PROCEDURES SEE TECHNICAL SPECIFICATIONS.
5. AFTER CHLORINE IS FLUSHED AND MAIN CONNECTION IS MADE, THE NEW MAIN SHALL BE FLUSHED AT A VELOCITY OF 5 FPS. DISCHARGE SHALL BE SCREENED TO COLLECT ROCKS. FLUSHING DURATION SHALL ENSURE AT LEAST 3 CHANGES OF WATER IN THE NEW MAIN.
6. IF FLOW OR DISCHARGE LIMITATIONS PREVENT ACHIEVING 5 FPS, THEN THE PIPE SHALL BE PIGGED.
7. PROVIDE DECHLORINATION DURING FLUSHING WHERE NECESSARY.

CITY OF ISSAQUAH WASHINGTON	ROBERT J. YORK STATE OF WASHINGTON 19576 REGISTERED PROFESSIONAL ENGINEER	**FILLING AND FLUSHING NEW WATER MAINS**	DATE: **5/18/2022**	STANDARD DETAIL NO.
			SCALE: **NTS**	**W-05**

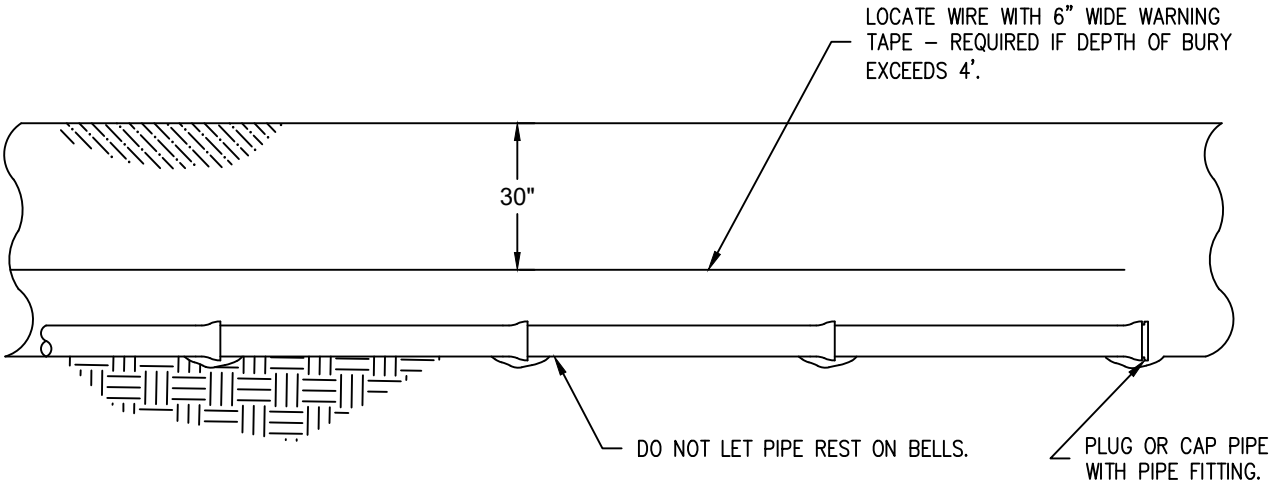

*** ALL JOINTS & CONNECTIONS SHALL BE MECHANICALLY RESTRAINED.**
PIPE & GASKETS SHALL BE COMPATIBLE.
SEE APPROVED MATERIAL LIST.

NOTES

1. LAY PIPE WITH BELLS UPGRADE.
2. PREPARE TRENCH SO PIPE IS SUPPORTED FULL–LENGTH.
3. PLUG OR CAP PIPE WHENEVER NOT ACTIVELY WORKING ON PIPE SECTION. USE MJ OR TYTON JOINT PLUG OR CAP. BOARDS, BUCKETS, ETC. ARE NOT ALLOWED.
4. PIPE THAT IS ROLLED OFF A TRUCK OR TRAILER, OR IS DROPPED OR OTHERWISE MISHANDLED WILL BE REJECTED.
5. CUT ENDS SHALL BE BEVELED PER MANUFACTURER SPECIFICATIONS PRIOR TO ASSEMBLY.
6. GASKETS SHALL BE LUBRICATED WITH APPROVED AWWA C11/A21.11–07 SEC. 4.5.4 LUBRICANT.
7. THE NEW WATER MAIN SHALL BE CONNECTED TO THE EXISTING SYSTEM ONLY AFTER NEW MAIN IS PRESSURE TESTED, DISINFECTED, FLUSHED AND SATISFACTORY BACTERIOLOGICAL SAMPLE RESULTS ARE OBTAINED.
8. NEW MAINS SHALL BE FLUSHED AT A MINIMUM VELOCITY OF 5 FPS.
9. PIPES LESS THEN 20' OR LENGTHS APPROVED BY CITY ENGINEER MAY BE SWABBED WITH 500 PPM CHLORINE SOLUTION. CARE SHALL BE TAKEN NOT TO GET CHLORINE ON THE OUTSIDE OF THE PIPE OR FITTINGS.
10. EXTREME CARE SHALL BE TAKEN TO PREVENT WATER AND/OR DEBRIS FROM ENTERING PIPE.
11. A TORQUE WRENCH SHALL BE USED TO PROPERLY TIGHTEN BOLTS AND NUTS TO MANUFACTURER SPECIFICATIONS.
12. JOINT ASSEMBLY SHALL BE INSTALLED PER MANUFACTURER SPECIFICATIONS.
13. PIPE LAYING OPERATIONS VIOLATING ANY SECTION OF THIS DETAIL SHALL BE IMMEDIATELY SUSPENDED UNTIL THE CITY HAS BEEN SATISFIED OF THE CONTRACTORS ABILITY TO MEET THESE REQUIREMENTS.
14. MAINTAIN 18" CLEAR ZONE AROUND WATER MAIN AND OTHER UTILITIES.

CITY OF ISSAQUAH WASHINGTON	ROBERT J. YORK STATE OF WASHINGTON 19576 REGISTERED PROFESSIONAL ENGINEER	**PIPE LAYING DETAIL**	DATE: **5/18/2022**	STANDARD DETAIL NO.
			SCALE: **NTS**	**W-06**

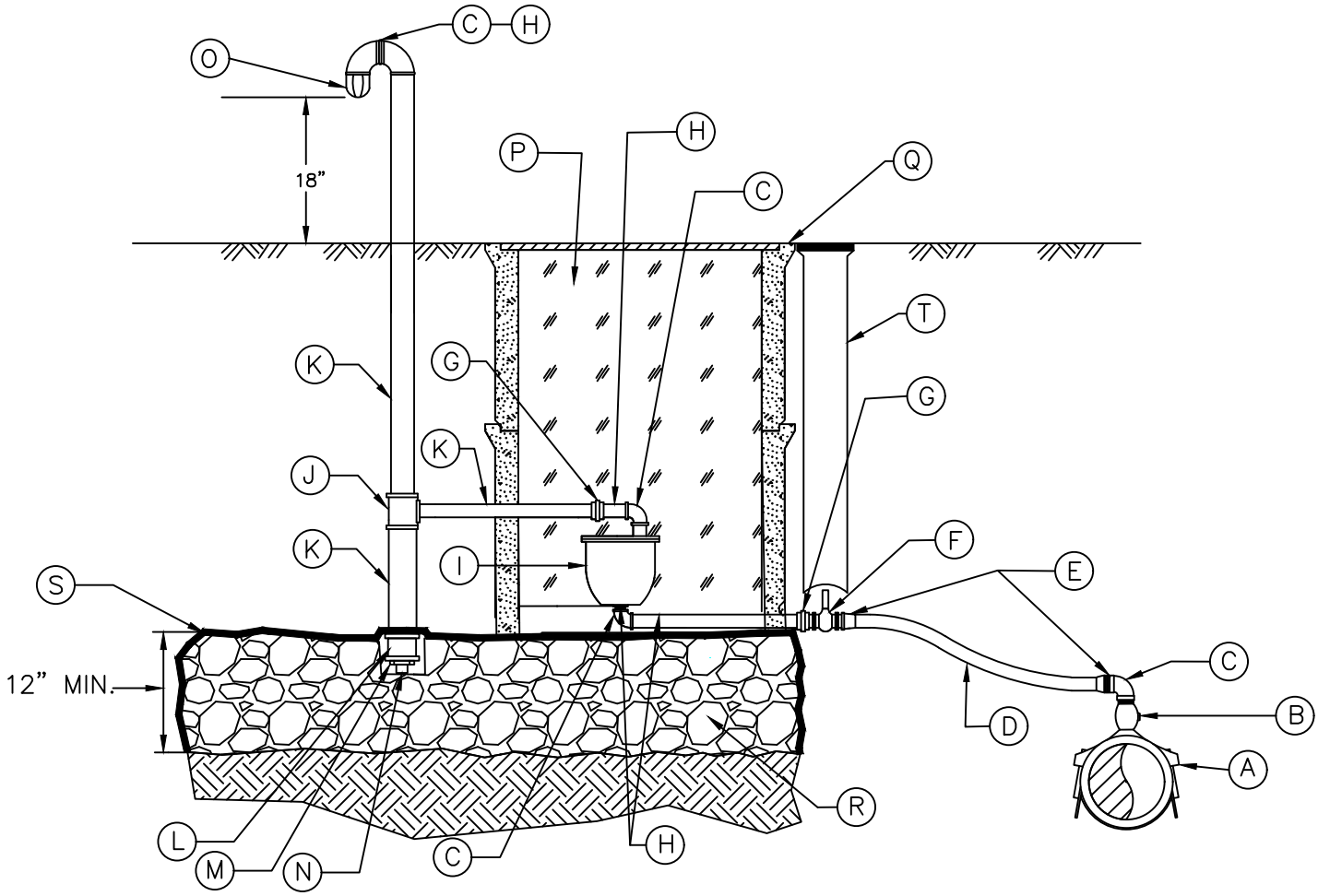

LEGEND:

A. ROMAC TAPPING SADDLE. SEE STANDARD DETAIL W–09 OR W–10 FOR PARTS.
B. MUELLER OR FORD BALL CORPORATION STOP, MALE CC THREAD INLET BY MALE IRON PIPE OUTLET.
C. 90° BRASS ELBOW FEMALE IRON PIPE BY FEMALE IRON PIPE THREADS.
D. TYPE K SOFT COPPER WITH NO JOINTS. MAINTAIN POSITIVE SLOPE TO AIR VACUUM ASSEMBLY.
E. COUPLING COPPER TO MALE IRON PIPE THREADS: MUELLER 110 COMPRESSION OR FORD QUICK JOINTS, NO PACK JOINTS ALLOWED.
F. CURB STOP: FORD OR MUELLER (SEE STANDARD DETAIL W–10 FOR PARTS).
G. BRASS UNION, FEMALE IRON PIPE BY FEMALE IRON PIPE.
H. NIPPLES: BRASS, MALE IRON PIPE BY MALE IRON PIPE THREADS, LENGTHS VARY.
I. AIR & VACUUM VALVE ASSEMBLY. SEE APPROVED MATERIAL LIST.
J. BRASS TEE, IRON PIPE THREADS.
K. BRASS PIPE, MALE IRON PIPE THREADS.
L. BRASS COUPLING
M. BRASS BUSHING TO FIT COUPLING X 1/2" FIP
N. AUTOMATIC DRAIN VALVE – WEATHERMATIC 910
O. BRASS BEEHIVE STRAINER
P. CEDAR SHAVINGS
Q. METER BOX (2 SECTIONS REQUIRED) DFWB40CNP4–S25–4MA2 FOR 1" AND SMALLER VALVES. VAULT REQUIRED FOR 1–1/2" AND LARGER VALVES. SEE STANDARD DETAIL G–05 (VAULTS–GENERAL FEATURES).
R. 7/8" WASHED ROCK
S. GEO FABRIC– ENCLOSE WASHED ROCK ON TOP AND ALL SIDES.
T. STANDARD VALVE BOX SEE STANDARD DETAIL W–21 (VALVE BOX INSTALLATION).

NOTES:

1. ALL PIPE AND FITTINGS TO BE BRASS, DUCTILE IRON OR COPPER.
2. PIPE ABOVE GRADE TO BE PAINTED. AIR VACUUM ASSEMBLY MUST BE CLEANED, SCUFFED/SANDED, PREPARED AND PAINTED PER PAINT MANUFACTURER SPECIFICATION. SEE APPROVED MATERIALS LIST FOR PRIMER AND PAINT.
3. AIR & VACUUM RELEASE VALVE ASSEMBLY TAP MUST BE INSTALLED AT HIGHEST POINT OF WATER MAIN.
4. LOCATE AIR & VACUUM METER BOX OUTSIDE OF TRAFFIC AREAS, BEHIND CURB OR SIDEWALK.
5. REQUIRED SIZE SHALL BE DESIGNED BY THE ENGINEER.
6. GUARD POST(S) MAY BE REQUIRED PER CITY'S DIRECTION.

CITY OF ISSAQUAH WASHINGTON	ROBERT J. YORK STATE OF WASHINGTON 19576 REGISTERED PROFESSIONAL ENGINEER	**AIR VACUUM RELEASE VALVE ASSEMBLY**	DATE: **5/18/2022**	STANDARD DETAIL NO.
			SCALE: **NTS**	**W-07**

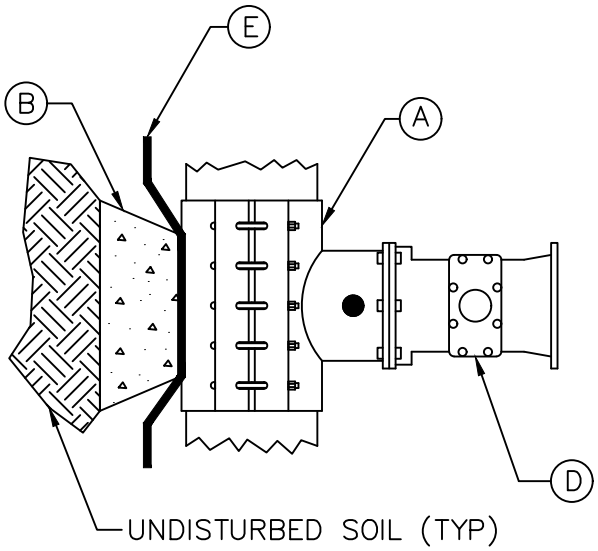

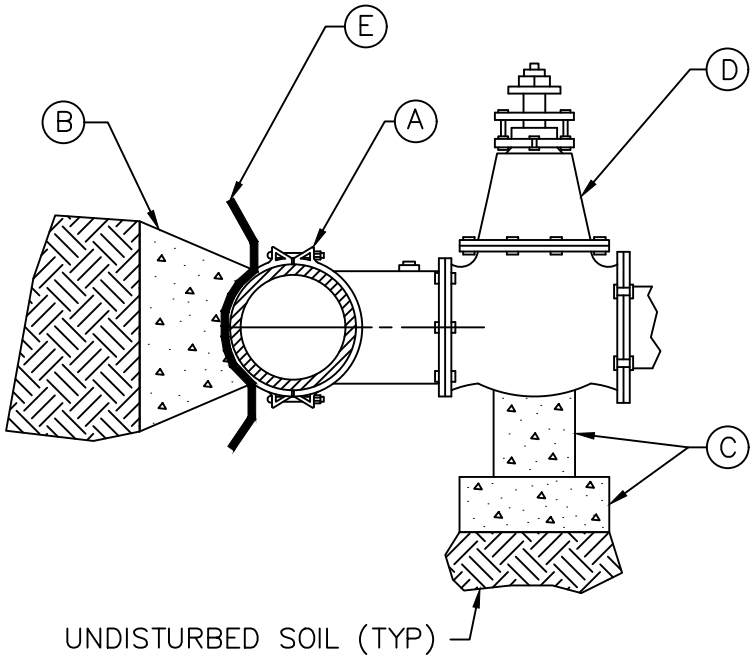

LEGEND

A. TAPPING TEES (SEE APPROVED MATERIAL LIST).
B. THRUST BLOCKING. SEE STANDARD DETAIL W-01 (TYPICAL HORIZONTAL CONCRETE BLOCKING).
C. CONCRETE BLOCK(S) SUPPORT. APPROVED BY CITY.
D. VALVE (SEE APPROVED MATERIAL LIST).
E. 8-MIL PLASTIC

NOTES

1. ALL TEES AND VALVES TO BE AIR-TESTED BEFORE TAP AT 120 PSI FOR 5 MINUTES.
2. SIZE-ON-SIZE TAPS ALLOWED ON DUCTILE IRON ONLY.
3. VALVES: SEE APPROVED MATERIAL LIST.
4. PIPE MUST BE RESTRAINED OR BLOCKED. SEE APPROVED MATERIAL LIST.
5. TORQUE ALL BOLTS TO MANUFACTURE SPECIFICATIONS.
6. TAPPING TEE: STAINLESS TAPPING TEE SHALL HAVE FULL-CIRCLE SEAL. ALL BOLTS SHALL BE STAINLESS STEEL.

CITY OF ISSAQUAH WASHINGTON	ROBERT J. YORK STATE OF WASHINGTON 19576 REGISTERED PROFESSIONAL ENGINEER	**TAPPING TEE**	DATE: **5/18/2022**	STANDARD DETAIL NO.
			SCALE: **NTS**	**W-08**

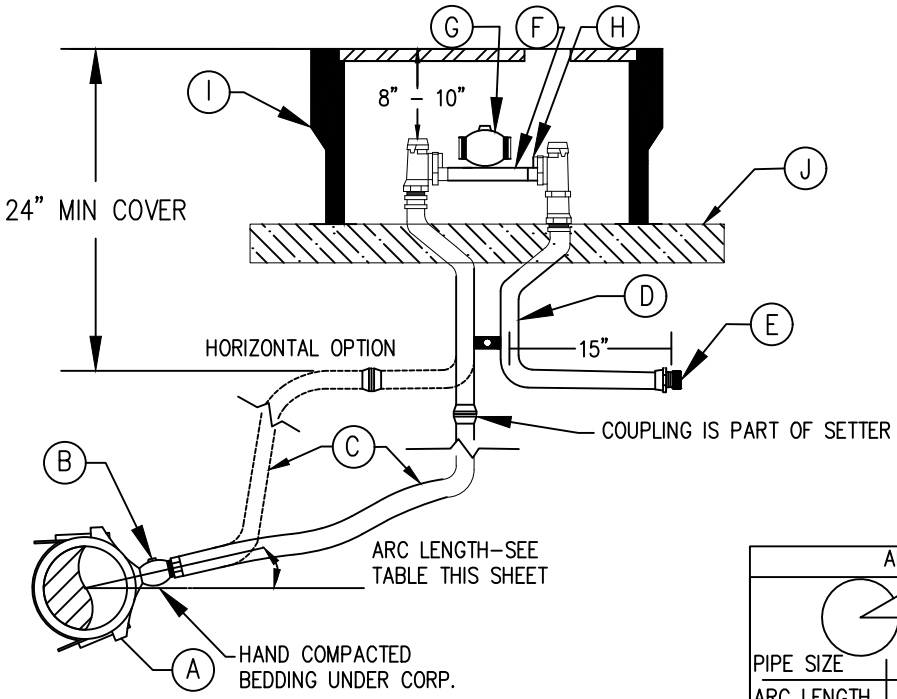

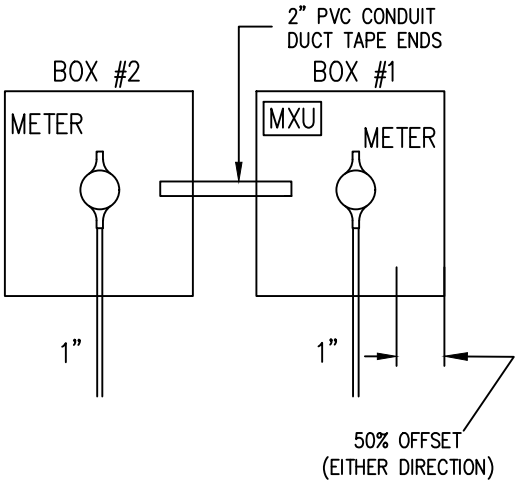

ARC LENGTH TABLE

MEASURED DISTANCE

PIPE SIZE	8"	12"	16"	24"
ARC LENGTH	2"	3"	4"	6"

LEGEND

A. ROMAC SADDLE
STAINLESS STEEL (SINGLE STRAP) SERVICE SADDLE WITH TAPER (CC) TAP. DOUBLE STRAP FOR 12" AND LARGER PIPES.
- ROMAC 101NS FOR UP TO 12" DUCTILE & CAST IRON.
- ROMAC 202NS FOR 12" OR LARGER DUCTILE & CAST IRON.
- ROMAC SSI FOR AC.

B. CORPORATION STOP; TAPER (CC) INLET x COMPRESSION FOR COPPER OUTLET. CORP SHALL BE ORIENTED WITH OPERATING STEM FACING UP.
- FORD FB1000–4–Q–NL FOR 1"
- MUELLER B–25008N FOR 1"

C. 1" TYPE K SOFT COPPER WITH NO JOINTS

D. 1" METER SETTER – VERTICAL OR HORIZONTAL INLET
- VERTICAL
  - 1" = MUELLER 391B25804R2–01N
  - 1" = FORD VBH94–15W–4M–44ZA–Q–NL
- HORIZONTAL
  - 1" = FORD VBH94–15W–4M–44AQ–NL

E. PLASTIC CAP

F. PVC JUMPER: DRILL – 1/4" HOLES
- 1" METER – 10 3/4" X 1 1/4" THRD PIPE.

G. METER:
- SENSUS 3/4" i–PERL, 7.5" LL, CCF
- SENSUS 1" i–PERL, 10.5" LL, CCF

H. METER ADAPTORS FOR A 3/4" SERVICE
- FORD A24–NL

I. METER BOX:
- DFW1324CNP4–18 BODY
- DFW1324SL–4MA2 LID

J. 6" OF 5/8" GRAVEL

NOTES:

1. SERVICE LINE MUST BE INSTALLED PERPENDICULAR TO THE WATER MAIN. BACKFILL WITH ⅝" MINUS TO 6" OVER PIPE. COMPACT TO 95% MAX. DRY DENSITY PER ASTM D–1557.
2. SERVICE TAPS WILL BE MINIMUM 18" FROM BELL OR SPIGOT.
3. IF TWO OR MORE SERVICES ARE REQUIRED THEN TAPS WILL BE INSTALLED 12" APART AND STAGGERED.
4. SERVICE SADDLES ARE REQUIRED ON ALL PIPE EXCEPT CLASS 52 OR THICKER DUCTILE IRON. THE CORP. STOP MAY BE TAPPED DIRECTLY INTO CLASS 52 OR THICKER DUCTILE IRON PIPE FOR 1" TAPS. ADD 6" ⅝" ROCK COMPACT TO WSDOT SPEC. 9–03.9(3).
5. SET BOX AT GRADE AND LEVEL WITH GRADE – PROVIDE POSITIVE DRAINAGE AWAY FROM BOX.
6. DOUBLE OR MULTIPLE SERVICES MUST BE NO MORE THAN 2 FEET APART – 6" IN SIDEWALKS (WHERE APPROVED).
7. METER LOCATIONS SHALL BE APPROVED BY CITY. AVOID VEHICLE TRAVEL AREAS WHENEVER POSSIBLE.
8. SERVICES SHALL BE INSTALLED BY THE CITY ON CITY OWNED MAINS.
9. SERVICES SHALL NOT BE TAPPED OFF HYDRANT OR FIRE SPRINKLER SYSTEM BRANCHES.
10. FILL METER BOX TO TOP WITH UN–COMPACTED CEDAR SHAVINGS.
11. CITY SHALL INSTALL METER UNLESS OTHERWISE APPROVED.
12. CONTRACTOR SHALL CONNECT PIPING FROM HOUSE TO METER SETTER PRIOR TO RADIO READ METER INSTALLATION.
13. ALL MULTIPLE METER BOXES THREE OR MORE MUST BE INDIVIDUALLY TAGGED. SECURE WITH WIRE–TIE TO LOWER LOCKING EAR OF SETTER. TAG MUST BE STAMPED OR ENGRAVED WITH HOUSE NUMBER. FONT SIZE MINIMUM ½".
14. ALL MATERIAL SHALL BE CERTIFIED "LEAD FREE". REFER TO REDUCTION OF LEAD IN DRINKING WATER ACT, NSF/ANSI STANDARD 61 AND/OR 372, WA DOH PUB. 331–473.
15. CONTRACTOR SHALL PROVIDE 5/8" X 3/4" TO 1" WATER METER ADAPTORS WHEN A 3/4" WATER SERVICE IS REQUESTED.

CITY OF ISSAQUAH WASHINGTON

ROBERT J. YORK STATE OF WASHINGTON 19576 REGISTERED PROFESSIONAL ENGINEER

3/4" AND 1" METER SERVICE FOR DOMESTIC, IRRIGATION AND FIRE

DATE: **5/18/2022**

SCALE: **NTS**

STANDARD DETAIL NO.

W-09

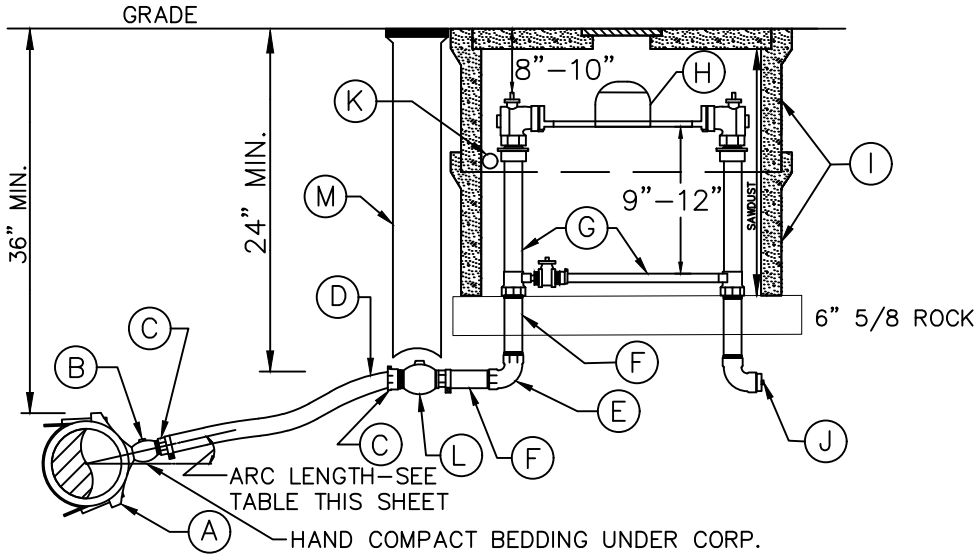

ARC LENGTH TABLE				
MEASURED DISTANCE				
PIPE SIZE	8"	12"	16"	24"
ARC LENGTH	2"	3"	4"	6"

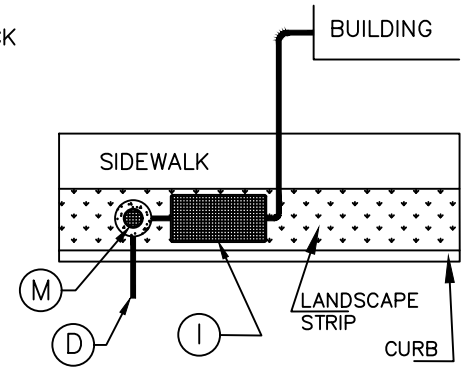

OPTIONAL METER BOX ORIENTATION

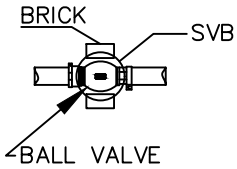

LEGEND

A. ROMAC SADDLE
STAINLESS STEEL (SINGLE STRAP) SERVICE SADDLE WITH AWWA CC TAP. DOUBLE STRAP FOR 12" AND LARGER PIPES.
- ROMAC 101NS FOR UP TO 12" DUCTILE & CAST IRON.
- ROMAC 202NS FOR 12" OR LARGER DUCTILE & CAST IRON. ROMAC SSI FOR AC.

B. CORPORATION STOP: AWWA CC BY MALE IRON PIPE THREAD OUTLET
- FORD FB–400–6–NL FOR 1–1/2"
- FORD FB–400–7–NL FOR 2"
- MUELLER B–2996N, SPECIFY SIZE

C. COUPLING, FEMALE IRON PIPE THREAD BY COMPRESSION FITTING FOR COPPER TUBING.
- FORD C14–66–Q–NL FOR 1–1/2" FEMALE
- FORD C14–77–Q–NL FOR 2" FEMALE
- FORD C84–66–Q–NL FOR 1–1/2" MALE
- FORD C84–77–Q–NL FOR 2" MALE
- MUELLER H–15451, SPECIFY SIZE

D. UNDER 40' USE TYPE K COPPER OR SCHEDULE 40 BRASS. OVER 40' USE POLYETHYLENE WITH TRACER WIRE. SEE STANDARD DETAIL G–02 FOR TRACER WIRE. SERVICE SHALL BE MADE WITH NO JOINTS.

E. 90° ELBOW, BRASS, FEMALE IRON PIPE BY FEMALE IRON PIPE.

F. NIPPLE, BRASS, MIP x MIP, 12" LONG OR AS REQUIRED

G. BRASS OR COPPER METER SETTER WITH BYPASS, CHECK VALVE, BALL VALVE WITH PADLOCK WINGS ON INLET, AND BYPASS.
VERTICAL INLET AND OUTLET:
- FORD VBH86–12B–11–66–NL FOR 1–1/2"
- FORD VBH87–12B–11–77–NL FOR 2"
- MUELLER B–2427–2, SPECIFY SIZE

FACE TO FACE DIMENSION: 1½" SETTER = 13⅜"
FACE TO FACE DIMENSION: 2" SETTER = 17⅜"

H. METER: SENSUS OMNI C2 WITH TOUCH READ
- 1–1/2" SENSUS OMNI C2 WITH 13" LAY LENGTH CCF
- 2" SENSUS OMNI C2 DRS WITH 17" LAY LENGTH CCF

I. METER BOX – DFWB40CNP4–S25–4MA2 (DFW PLASTICS CITY OF ISSAQUAH SPECIFIC PART #. SEE APPROVED MATERIAL LIST)

J. BRASS PLUG

K. METER BOXES WITHIN 5' OF EACH OTHER MUST BE CONNECTED TOGETHER AND INDIVIDUALLY WITH 2" PVC CONDUIT, SCHEDULE 40, WITH ENDS TAPED CLOSED BETWEEN BOXES.

L. BALL VALVE:
- FORD BALL VALVE B11–666–NL FOR 1–1/2"
- FORD BALL VALVE B11–777–NL FOR 2"

M. STANDARD VALVE BOX SEE STANDARD DETAIL W–21 (VALVE BOX INSTALLATION)

NOTES:

1. SERVICE LINE MUST BE INSTALLED PERPENDICULAR TO THE WATER MAIN. BACKFILL WITH 5/8" MINUS TO 6" OVER PIPE COMPACT TO 95% MAX. DRY DENSITY PER ASTM–1557.
2. SERVICE TAPS WILL BE A MINIMUM OF 18" FROM BELL OR SPIGOT.
3. IF TWO OR MORE SERVICES ARE REQUIRED THEN TAPS WILL BE INSTALLED 12" APART AND STAGGERED.
4. DOUBLE OR MULTIPLE SERVICES MUST BE NO MORE THAN 2' APART–6" IN SIDEWALKS (WHERE APPROVED).
5. SERVICES SHALL BE INSTALLED BY THE CITY ON CITY OWNED MAINS.
6. METER LOCATIONS SHALL BE APPROVED BY CITY. AVOID VEHICLE TRAVEL AREAS.
7. IF THE METER AND VALVE BOX DO NOT FIT IN THE LANDSCAPE STRIP PERPENDICULAR TO THE CURB, THE BOX MAY BE ROTATED 90 DEGREES SO THAT THE LONG EDGE IS PARALLEL TO THE CURB AND THE BOX, METER AND SETTER SHALL BE PERPENDICULAR TO THE SERVICE LINE, WITH THE TAIL RUN TOWARDS THE STRUCTURE. SEE DETAIL.
8. SERVICES SHALL NOT BE TAPPED OFF HYDRANT OR FIRE SPRINKLER SYSTEM BRANCHES.
9. CITY SHALL INSTALL METER UNLESS OTHERWISE APPROVED.
10. CONTRACTOR SHALL CONNECT TAILRUN TO METER SETTER.
11. SET BOX AT GRADE AND LEVEL WITH GRADE–PROVIDE POSITIVE DRAINAGE FROM BOX.
12. FILL METER BOX TO TOP WITH UNCOMPACTED CEDAR SHAVINGS.
13. COUPLINGS FOR POLYETHYLENE PIPE REQUIRE STIFFENERS INSIDE PIPE.
14. ALL MULTIPLE METER BOXES THREE OR MORE MUST BE INDIVIDUALLY TAGGED. SECURE WITH WIRE–TIE TO LOWER LOCKING EAR OF SETTER. TAG MUST BE STAMPED OR ENGRAVED WITH HOUSE NUMBER. FONT SIZE MINIMUM 1/2".
15. ALL MATERIAL SHALL BE CERTIFIED "LEAD FREE." REFER TO REDUCTION OF LEAD IN DRINKING WATER ACT, NSF–ANSI STANDARD 61 AND/OR 372, WA DOH PUB 331–473.

CITY OF ISSAQUAH WASHINGTON

ROBERT J. YORK STATE OF WASHINGTON 19576 REGISTERED PROFESSIONAL ENGINEER

1-1/2" AND 2" WATER METER SERVICE

DATE: **5/18/2022**

SCALE: **NTS**

STANDARD DETAIL NO.

W-10

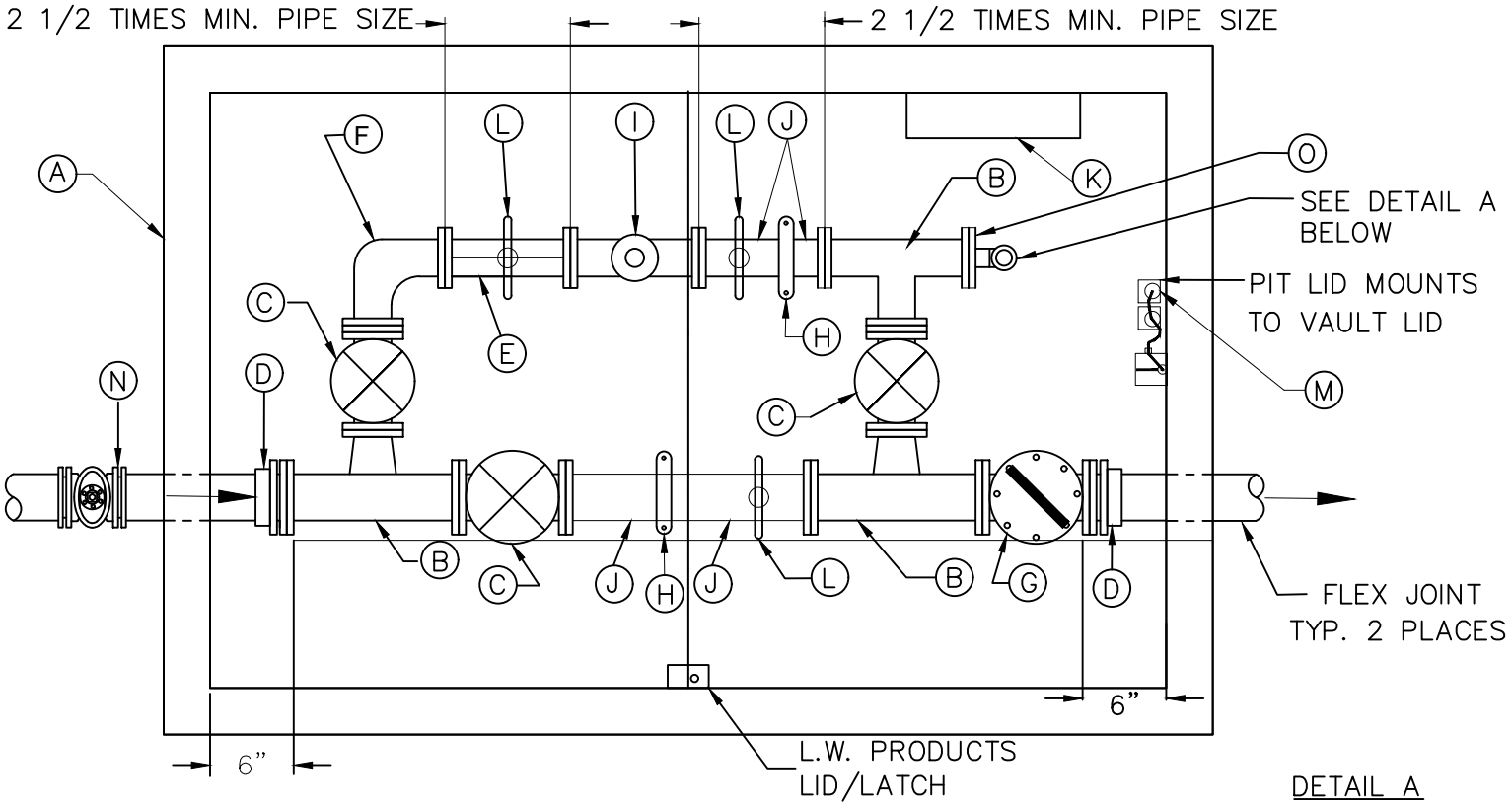

DETAIL A

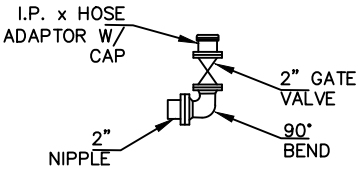

LEGEND:

A. VAULT–SIZED TO FIT, SEE STANDARD DETAIL G–05 (VAULTS–GENERAL FEATURES).
B. FLANGED TEE (3)
C. GATE VALVE FLANGED x FLANGED (3) WITH HAND WHEEL. SEE APPROVED MATERIALS LIST.
D. RESTRAINED JOINT. SEE APPROVED MATERIALS LIST.
E. FLANGED SPOOL MADE TO FIT MIN. 2½ TIMES PIPE DIAMETER.
F. FLANGED 90° (1)
G. SWING CHECK FLANGED x FLANGED. SEE APPROVED MATERIALS LIST.
H. VICTAULIC COUPLING STYLE 31
I. SENSUS OMNI METER C2 CFF WITH 12' TOUCH READ WIRE WITH SENSOR
J. SPOOL FLANGED x PLAIN END (2) – MADE TO FIT
K. LADDER – SEE STANDARD DETAIL G–05 (VAULT–GENERAL FEATURES).
L. STANCHIONS (3) – SEE APPROVED MATERIALS LIST.
M. PIT LID ADAPTER, RADIO READ, SENSUS 520R MXU – SUPPLIED AND INSTALLED BY CITY
N. VALVE AT MAIN CONNECTION SEE APPROVED MATERIALS LIST.
O. BLIND FLANGE – TAP 2"

NOTES:

1. ALL MATERIALS INCLUDING METER SHALL BE FURNISHED BY THE CONTRACTOR.
2. ALL PIPE AND FITTINGS SHALL BE CEMENT LINED DUCTILE IRON, CLASS 53 MINIMUM.
3. VAULT LOCATION TO BE APPROVED BY CITY.
4. PROVIDE 24" CLEARANCE BETWEEN VAULT FLOOR AND CENTER LINE OF OMNI C2 METER. WHERE ELEVATION OF VAULT FLOOR IS TOO LOW TO DRAIN TO DAYLIGHT OR STORM SYSTEM, THIS CLEARANCE CAN BE REDUCED TO A MINIMUM 12", IF SUBSTITUTION OF A SHORTER VAULT ALLOWS FLOOR TO DRAIN TO DAYLIGHT OR STORM SYSTEM.
5. ALL FITTINGS OUTSIDE THE VAULT SHALL BE RESTRAINED PER LICENSED CIVIL ENGINEER DESIGN.
6. TOP OF VAULT SHALL BE 3" ABOVE FINISHED GRADE IN LANDSCAPE AREAS.
7. PROVIDE POSITIVE DRAINAGE AWAY FROM VAULT.
8. VALVES/VAULT SHALL BE LOCKED AFTER METER INSTALLATION UNTIL WATER QUALITY INSPECTION HAS BEEN COMPLETED BY CITY. BYPASS VALVE SHALL BE LOCKED AT INSTALLATION OF THE VALVE.
9. TORQUE ALL BOLTS TO MANUFACTURE SPECIFICATIONS.
10. ALL GATE VALVES IN THE VAULT SHALL HAVE HAND WHEELS.

CITY OF ISSAQUAH WASHINGTON	ROBERT J. YORK STATE OF WASHINGTON 19576 REGISTERED PROFESSIONAL ENGINEER	**3" AND LARGER METER INSTALLATION**	DATE: **5/18/2022**	STANDARD DETAIL NO.
			SCALE: **NTS**	**W-11**

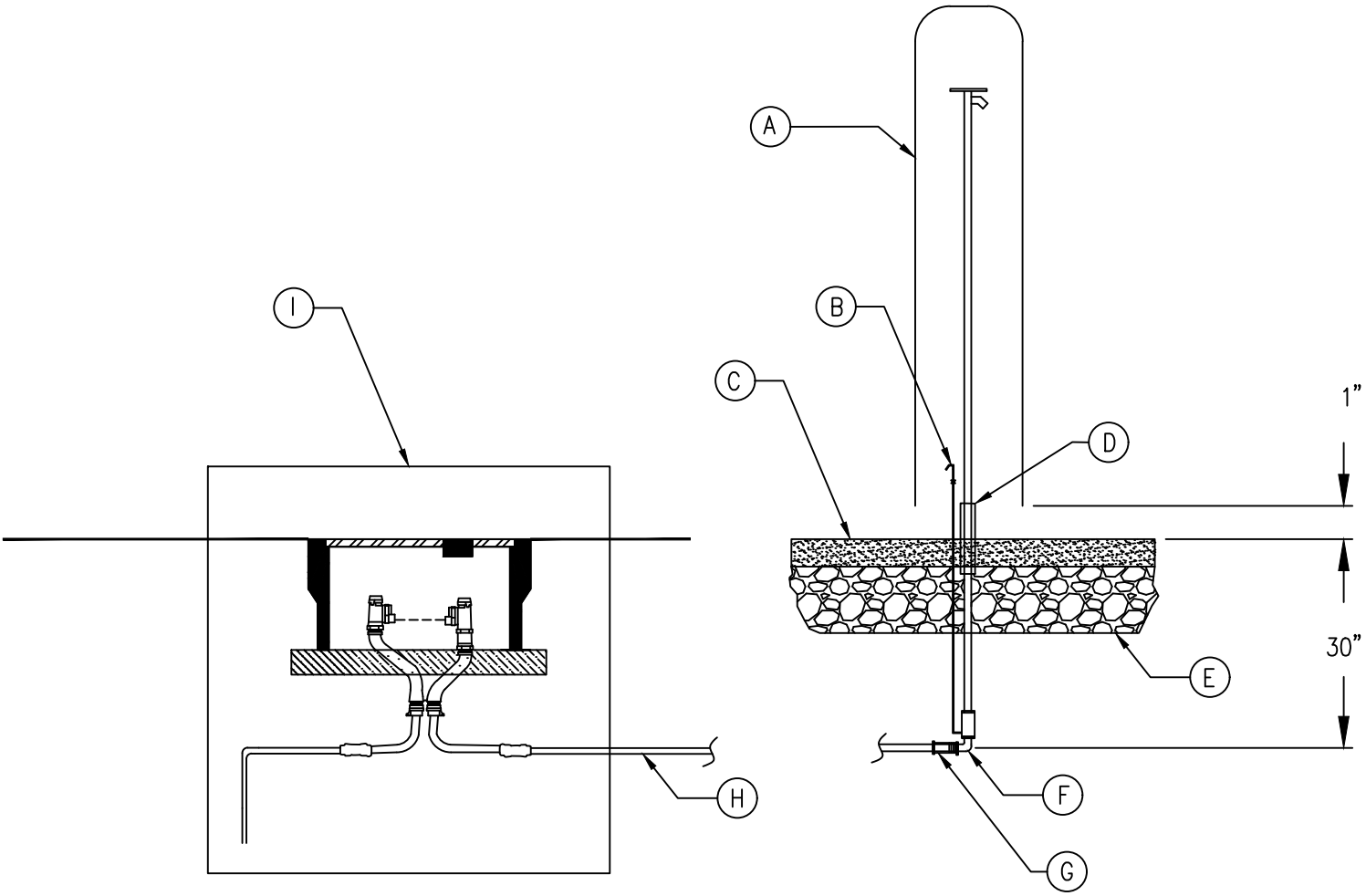

LEGEND

A. SAMPLING STATION KUPFERLE ECLIPSE PART NUMBER 88–SS WITH ALUMINUM ENCLOSURE
B. ¼" O.D. TUBING WITH VALVE
C. INSTALL 3' x 3' x 4" CONCRETE PAD
D. WRAP RISER PIPE WITH PIPE INSULATING FOAM PRIOR TO INSTALLING CONCRETE PAD
E. 6" MINIMUM CRUSHED SURFACE BASE COURSE
F. 1" BRASS STREET 90° ELBOW
G. ¾" COMPRESSION x 1" MIP
H. ¾" TYPE K SOFT COPPER PIPE
I. SEE STANDARD DETAIL W–09 (¾" & 1" WATER METER SERVICE)

NOTES

1. SET AT GRADE AND LEVEL WITH GRADE – PROVIDE POSITIVE DRAINAGE AWAY FROM BOX AND PEDESTRIAN AREAS.
2. MINIMUM 3' CLEAR LEVEL AREA AROUND SAMPLE STAND.
3. AVOID VEHICLE TRAVEL AREAS.
4. SERVICES SHALL NOT BE TAPPED OFF HYDRANT OR FIRE SPRINKLER SYSTEM BRANCHES.
5. CONTRACTOR RESPONSIBLE FOR SUPPLYING "BEST" BRAND LOCK AND CORE. CONTACT CITY FOR ORDERING.

CITY OF ISSAQUAH WASHINGTON	ROBERT J. YORK STATE OF WASHINGTON 19576 REGISTERED PROFESSIONAL ENGINEER	**SAMPLING STATION**	DATE: **5/18/2022**	STANDARD DETAIL NO.
			SCALE: **NTS**	**W-12**

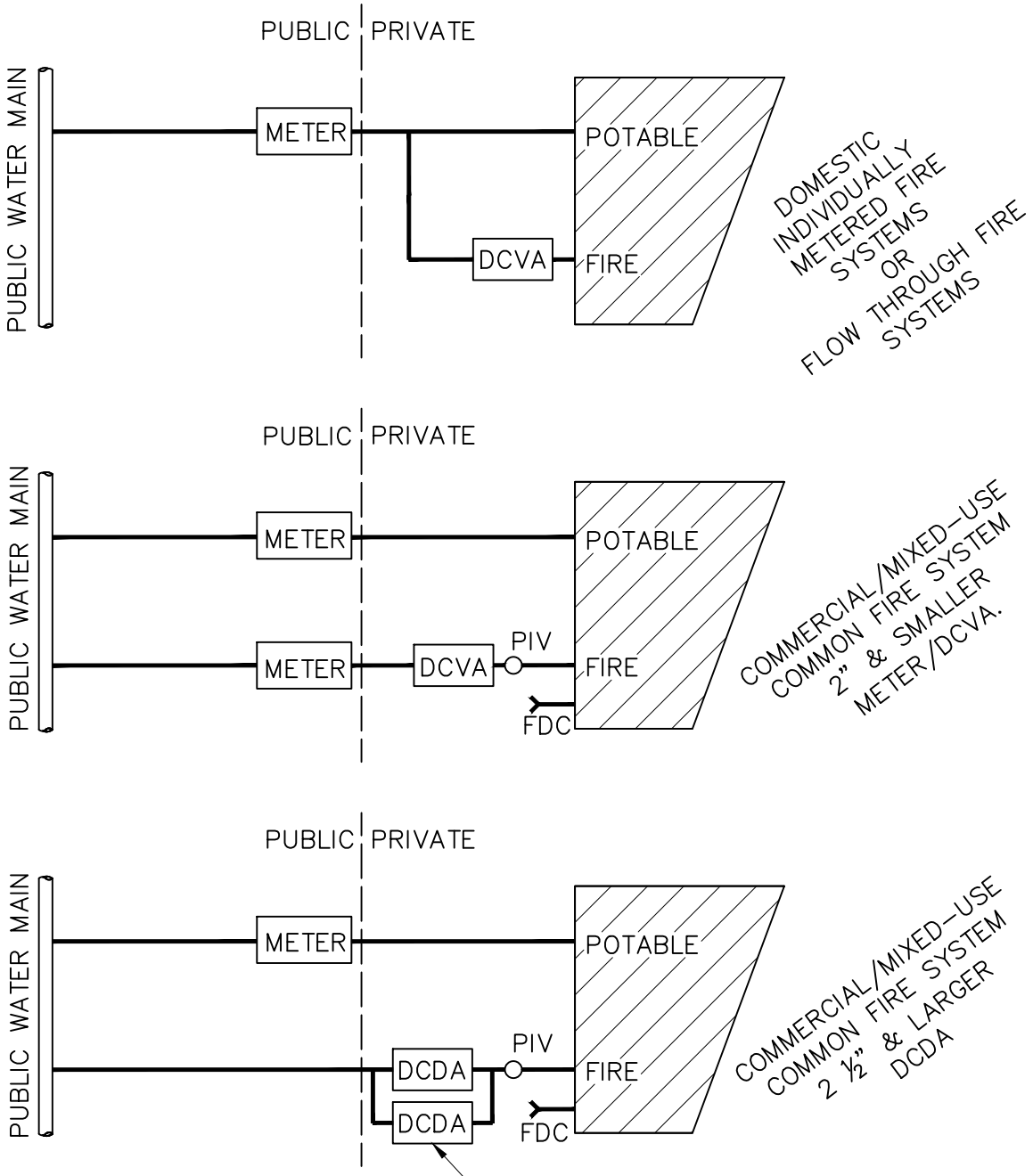

NOTES

1. RPDA(S) OR RPBA(S) MAY BE REQUIRED

FLOW THROUGH FIRE SYSTEM NOTES

1. FLOW THROUGH FIRE SYSTEMS ARE ALLOWED PER CODE WITH NO BACKFLOW DEVICE REQUIRED.
2. FLOW THROUGH FIRE SYSTEMS MUST BE APPROVED BY CITY OF ISSAQUAH WATER DIVISION PRIOR TO INSTALLATION.
3. INSPECTION BY WATER QUALITY DIVISION REQUIRED BEFORE SHEET ROCK IS INSTALLED..

ALLOWABLE CONNECTION OPTIONS

CITY OF ISSAQUAH WASHINGTON	ROBERT J. YORK STATE OF WASHINGTON 19576 REGISTERED PROFESSIONAL ENGINEER	**FIRE SYSTEM SCHEMATICS**	DATE: **5/18/2022**	STANDARD DETAIL NO.
			SCALE: **NTS**	**W-13**

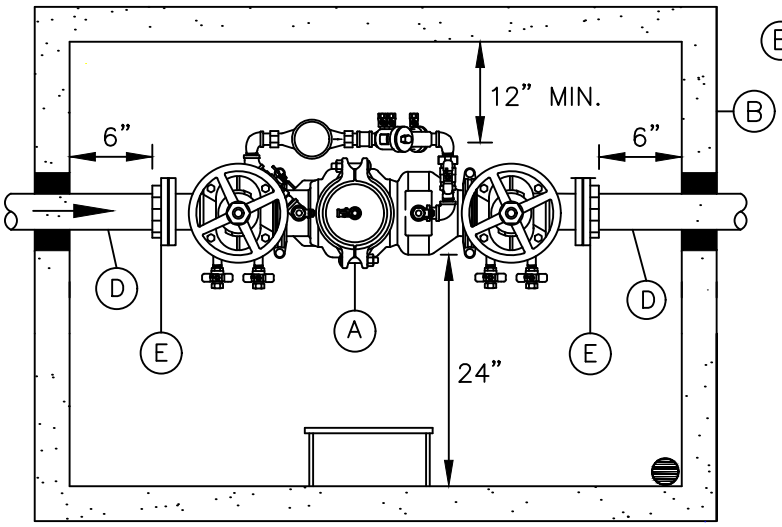

PLAN

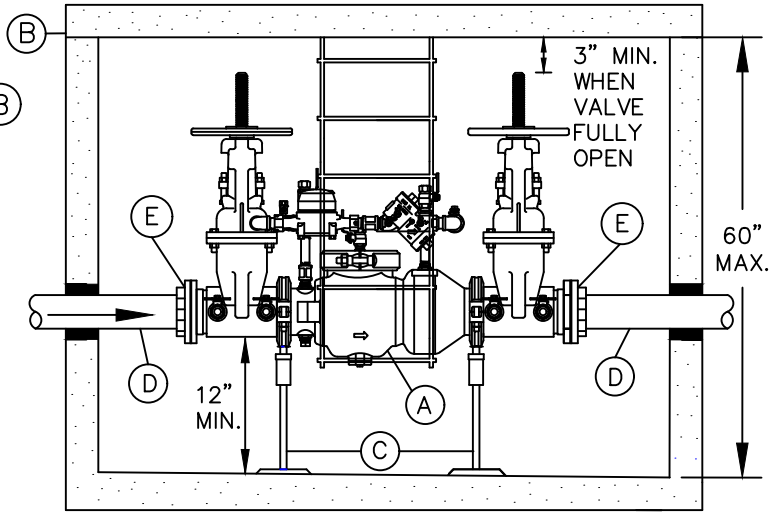

ELEVATION

DETAIL SHOWN IS FOR BELOW GROUND INSTALLATION.

LEGEND

A. DCDA MUST BE FACTORY ASSEMBLED AND CERTIFIED WITH THE STATE.
B. VAULT: SEE GENERAL STANDARD DETAIL G-05 (VAULT-GENERAL FEATURES).
C. ADJUSTABLE PIPE STANCHIONS – SEE APPROVED MATERIALS LIST.
D. PIPE CLASS 52 DUCTILE IRON MINIMUM.
E. RESTRAINED JOINT – SEE APPROVED MATERIAL LIST.

NOTES

1. ASSEMBLY TO BE MAINTAINED BY OWNER AND ANNUAL CERTIFICATION REQUIRED.
2. FIRELINE SHALL NOT BE PUT INTO SERVICE UNTIL THE BACKFLOW PROTECTION INSTALLATION IS APPROVED BY CITY OF ISSAQUAH INSPECTOR.
3. ALL PIPING RESTRAINED PER DESIGN ENGINEER.
4. TEE AND GATE VALVE REQUIRED ON MAINLINE CONNECTION.
5. AVOID VEHICULAR TRAFFIC AREAS FOR INSTALLATION.
6. FDC AND PIV TO BE LOCATED DOWNSTREAM OF ASSEMBLY.
7. INSTALL PLUGS IN ALL TEST COCKS.
8. IF INSTALLED OUTDOORS AND ABOVE GROUND, ADEQUATE FREEZE PROTECTION MUST BE PROVIDED.
9. A VAULT DRAIN LINE IS REQUIRED. INSTALL OUT THE SIDE OR BOTTOM IF ELEVATION ALLOWS. WORK WITH CITY ENGINEER. SEE GENERAL STANDARD DETAIL G-05.
10. ALL RESILIENT SEATED GATE VALVES SHALL BE OF THE O.S.&Y. TYPE.
11. PROVIDE ADEQUATE CLEARANCE FOR TESTING AND REPAIRS:
    a. THERE MUST BE AT LEAST 12" CLEARANCE ON ALL SIDES OF ASSEMBLY.
    b. IF ABOVE GROUND THE ASSEMBLY SHALL BE NO HIGHER THAN 60" FROM THE FLOOR OR GROUND TO HIGHEST POINT OF ASSEMBLY.

CITY OF ISSAQUAH WASHINGTON	ROBERT J. YORK STATE OF WASHINGTON 19576 REGISTERED PROFESSIONAL ENGINEER	**2-1/2" & LARGER DOUBLE CHECK DETECTOR ASSEMBLY (DCDA)**	DATE: **5/18/2022**	STANDARD DETAIL NO.
			SCALE: **NTS**	**W-14**

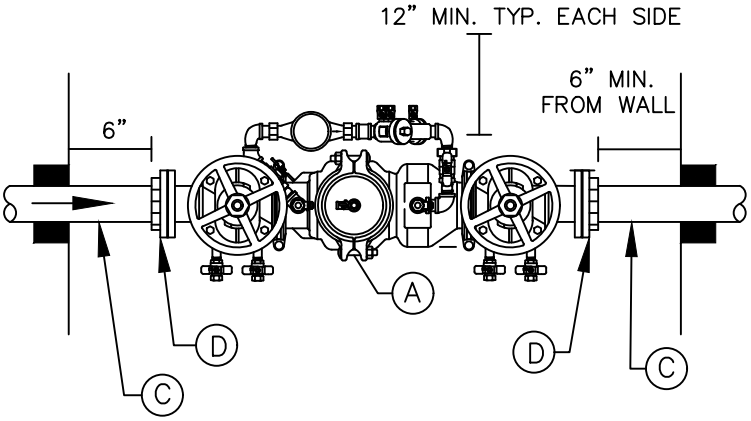

PLAN

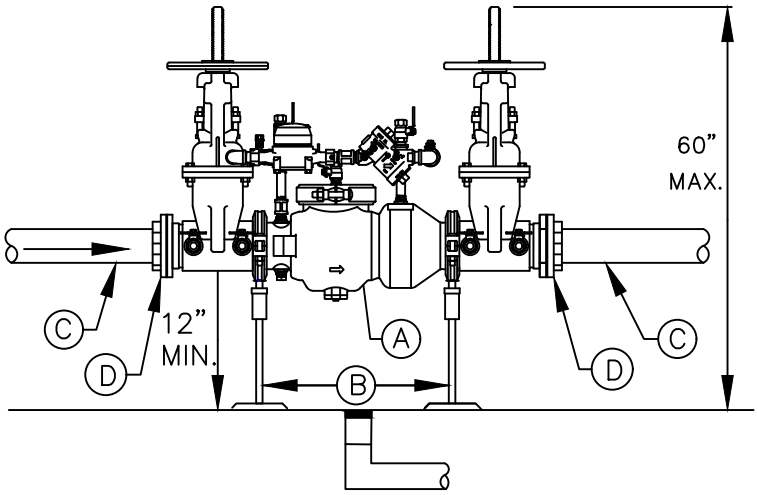

ELEVATION

LEGEND

A. RPBA MUST BE FACTORY ASSEMBLED AND CERTIFIED WITH THE STATE.
B. ADJUSTABLE PIPE STANCHIONS – SEE APPROVED MATERIALS LIST.
C. PIPE CLASS 52 DUCTILE IRON MINIMUM.
D. RESTRAINED JOINT – SEE APPROVED MATERIAL LIST.

NOTES

1. ASSEMBLY TO BE MAINTAINED BY OWNER AND ANNUAL CERTIFICATION REQUIRED.
2. FIRELINE SHALL NOT BE PUT INTO SERVICE UNTIL THE BACKFLOW PROTECTION INSTALLATION IS APPROVED BY CITY OF ISSAQUAH INSPECTOR.
3. ALL PIPING RESTRAINED PER DESIGN ENGINEER.
4. TEE AND GATE VALVE REQUIRED ON MAINLINE CONNECTION.
5. FDC AND PIV TO BE LOCATED DOWNSTREAM OF ASSEMBLY.
6. ALL RESILIENT SEATED GATE VALVES SHALL BE OF THE O.S.&Y. TYPE.
7. PROVIDE ADEQUATE CLEARANCE FOR TESTING AND REPAIRS:
   a. THERE MUST BE AT LEAST 12" CLEARANCE ON ALL SIDES OF DEVICE.
   b. THE ASSEMBLY SHALL BE NO HIGHER THAN 60" FROM THE FLOOR OR GROUND TO HIGHEST POINT OF ASSEMBLY.
8. THE RPBA MUST BE INSTALLED ABOVE GROUND LEVEL WHERE THERE IS NO CHANCE OF FLOODING.
9. IF INSTALLED OUTDOORS, PROVIDE ADEQUATE FREEZE PROTECTION.
10. THERE MUST BE AN APPROVED AIR GAP BETWEEN THE RELIEF PORT AND DRAIN.
11. INSTALL PLUGS IN ALL TEST COCKS.
12. THE RPDA RELIEF PORT DISCHARGE MUST BE DRAINED AWAY FROM THE ASSEMBLY. SIZE PIPING AND DRAIN ACCORDING TO RELIEF PORT MAXIMUM DISCHARGE.
13. INSTALL RPDA IN THE HORIZONTAL POSITION ONLY.
14. AVOID VEHICULAR TRAFFIC AREAS FOR INSTALLATION.

CITY OF ISSAQUAH WASHINGTON	ROBERT J. YORK STATE OF WASHINGTON 19576 REGISTERED PROFESSIONAL ENGINEER	**2-1/2" & LARGER REDUCED PRESSURE DETECTOR ASSEMBLY FOR HIGH HAZARD FIRE SPRINKLER ASSEMBLY (RPDA)**	DATE: **5/18/2022**	STANDARD DETAIL NO.
			SCALE: **NTS**	**W-15**

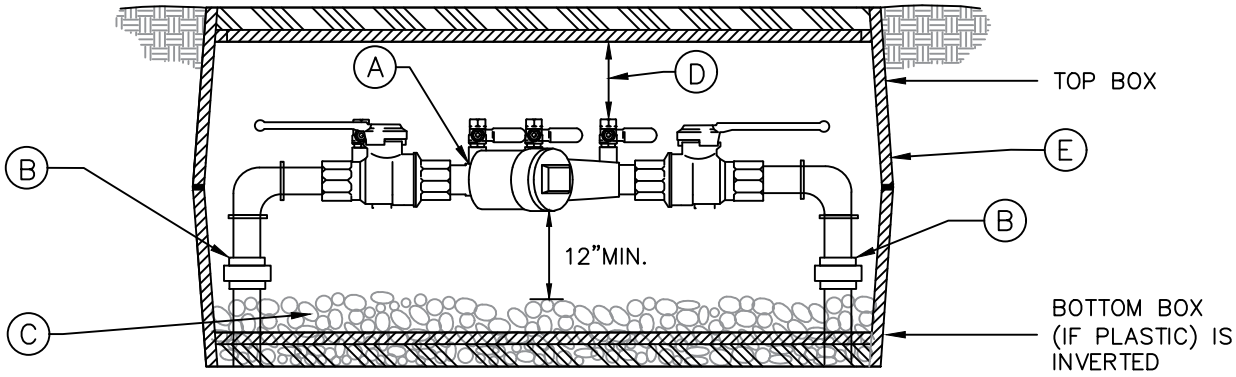

SECTION

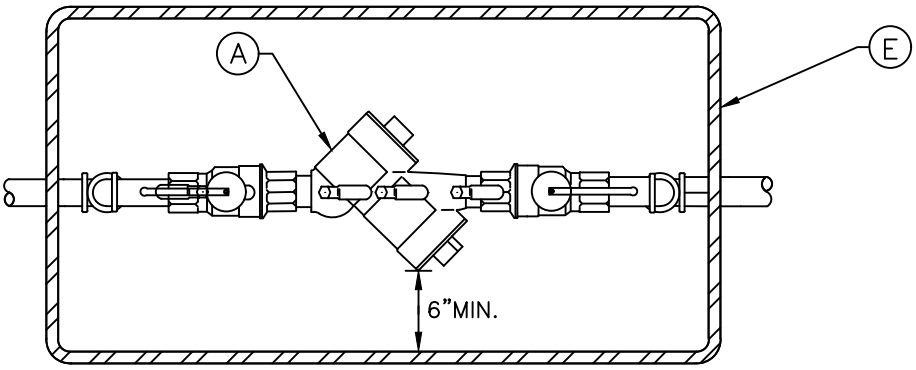

PLAN

DETAIL SHOWN IS FOR UNDERGROUND INSTALLATION

LEGEND

A. DCVA MUST BE FACTORY ASSEMBLED AND CERTIFIED WITH THE STATE.
B. UNION (TYPICAL). MUST BE VISIBLE ABOVE WASHED ROCK.
C. 6" MINIMUM ⅞" WASHED ROCK
D. 3" TO 6" MINIMUM. IF USED FOR FIRE SYSTEM 8" TO 10" WITH FREEZE PROTECTION.
E. BOX SIZES SHALL BE SIZED FOR UNDERGROUND INSTALLATION;
   1. FOR ¾" AND 1" DEVICES, INSTALL TWO "JUMBO" FULL-HEIGHT IRRIGATION BOXES: (TOP = 12 ¾" x 18 ¾": BOTTOM = 18" x 24"). LARGER BOXES MAY BE USED. INVERT BOTTOM BOX (UPSIDE DOWN). IF ASSEMBLY IS INSTALLED IN A CONCRETE OR PAVED AREA, THEY MUST BE REINFORCED CONCRETE BOXES OF SAME SIZE OR LARGER WITH INSPECTION LID.
   2. FOR 1-1/2" AND 2" ASSEMBLY, INSTALL TWO STACKED "FOG-TITE" # 2 OR EQUAL REINFORCED CONCRETE BOXES WITH INSPECTION LID.

NOTES

1. ASSEMBLY TO BE MAINTAINED BY OWNER AND ANNUAL CERTIFICATION REQUIRED.
2. PROVIDE ADEQUATE CLEARANCE FOR TESTING AND REPAIRS. DO NOT INSTALL MORE THAN 60" IN HEIGHT AND A MAXIMUM OF 12" FROM END OF TEST COCK TO WALL OR STRUCTURE INSIDE BUILDING.
3. INSTALL PLUGS IN ALL TEST COCKS. TEST COCKS SHALL FACE UP.
4. THERE WILL BE NO DCVA INSTALLATIONS IN AREAS ACCESSIBLE TO VEHICLE TRAFFIC UNLESS PRIOR APPROVAL IS OBTAINED FROM ISSAQUAH PUBLIC WORKS OPERATIONS DEPARTMENT.
5. PROVIDE ADEQUATE FREEZE PROTECTION.
6. THE USE OF GALVANIZED WATER FITTINGS AND PIPING IS PROHIBITED. USE COPPER, BRASS OR PLASTIC FITTINGS AND/OR PIPING.

CITY OF ISSAQUAH WASHINGTON	ROBERT J. YORK STATE OF WASHINGTON 19576 REGISTERED PROFESSIONAL ENGINEER	**1/2" - 2" DOUBLE CHECK VALVE ASSEMBLY (DCVA)**	DATE: **5/18/2022**	STANDARD DETAIL NO.
			SCALE: **NTS**	**W-16**

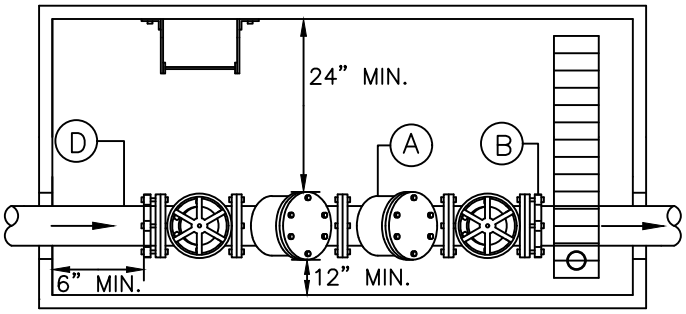

PLAN

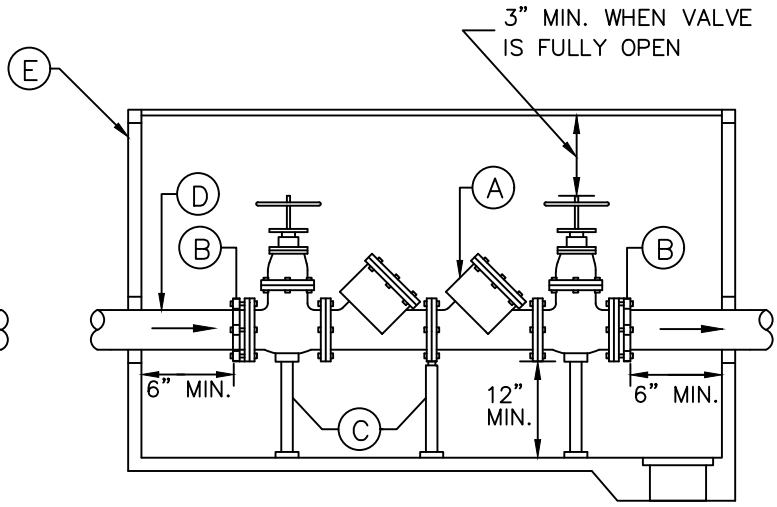

ELEVATION

DETAIL SHOWN IS FOR BELOW GROUND INSTALLATION.

LEGEND

A. THE DCVA MUST BE FACTORY ASSEMBLED AND CERTIFIED WITH THE STATE.
B. RESTRAINED JOINT – SEE APPROVED MATERIAL LIST.
C. AJUSTABLE PIPE STANCHIONS – SEE APPROVED MATERIALS LIST.
D. PIPE CLASS 52 DUCTILE IRON MINIMUM.
E. VAULT: SEE STANADRD DETAIL G–05 (VAULT–GENERAL FEATURES)

NOTES

1. WATERLINE SHALL NOT BE PUT INTO SERVICE UNTIL THE BACKFLOW PREVENTION ASSEMBLY IS APPROVED BY THE CITY OF ISSAQUAH INSPECTOR.
2. ASSEMBLY TO BE MAINTAINED BY OWNER AND ANNUAL CERTIFICATION REQUIRED.
3. AVOID VEHICULAR TRAFFIC AREAS FOR INSTALLATION.
4. FIRE SUPPRESSION SYSTEMS USE STANDARD DETAIL W–14 (DCDA).
5. PROVIDE ADEQUATE CLEARANCE FOR TESTING AND REPAIRS:
   A. THERE MUST BE AT LEAST 12" CLEARANCE ON ALL SIDES OF ASSEMBLY.
   B. IF ABOVE GROUND THE DEVICE SHALL BE NO HIGHER THAN 60" FROM FLOOR OR GROUND TO HIGHEST POINT OF DEVICE.
6. INSTALL PLUGS IN ALL TEST COCKS.
7. PROVIDE ADEQUATE FREEZE PROTECTION.

CITY OF ISSAQUAH WASHINGTON	ROBERT J. YORK STATE OF WASHINGTON 19576 REGISTERED PROFESSIONAL ENGINEER	**2 1/2" - 10" DOUBLE CHECK VALVE ASSEMBLY (DCVA)**	DATE: **5/18/2022**	STANDARD DETAIL NO.
			SCALE: **NTS**	**W-17**

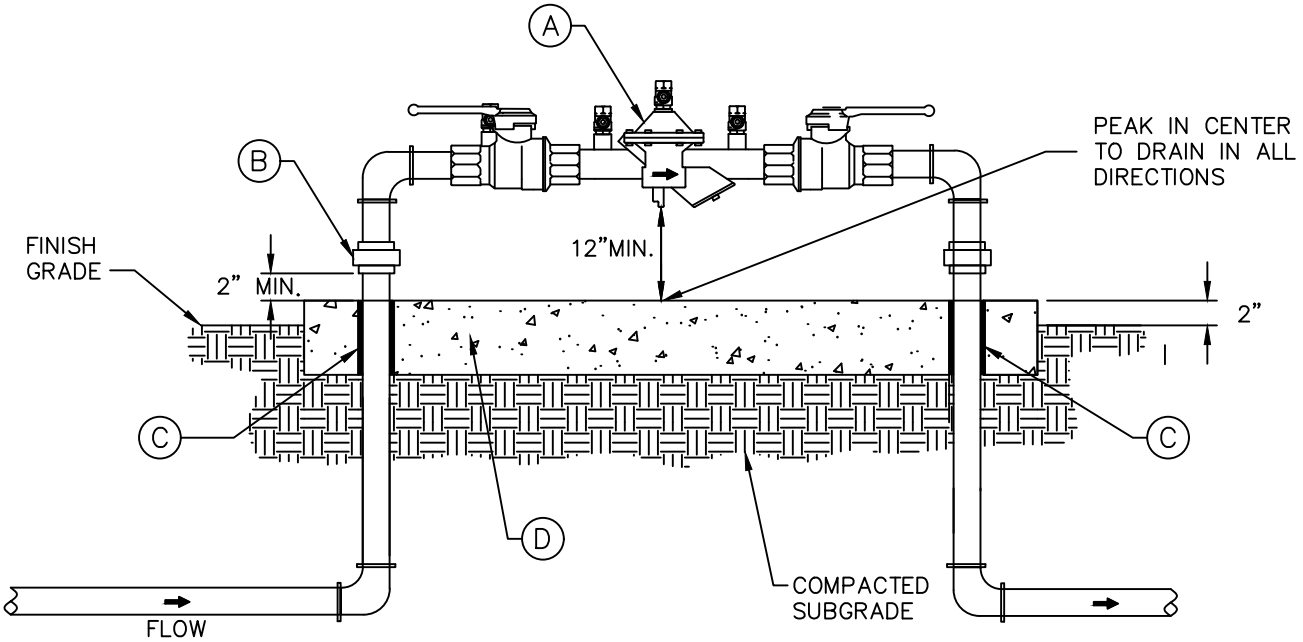

SECTION

LEGEND

A. RPBA MUST BE FACTORY ASSEMBLED AND CERTIFIED WITH THE STATE.
B. UNION (TYPICAL)
C. PIPE SLEEVE
D. 6" CONCRETE PAD

NOTES

1. ASSEMBLY TO BE MAINTAINED BY OWNER AND ANNUAL CERTIFICATION REQUIRED.
2. THE RPBA RELIEF PORT DISCHARGE MUST BE DRAINED AWAY FROM THE DEVICE. IF INSTALLING A DRAIN, SIZE PIPE AND DRAIN ACCORDING TO RELIEF PORT MAXIMUM DISCHARGE. THERE MUST BE AN APPROVED AIR GAP BETWEEN THE RELIEF PORT AND DRAIN.
3. THE RPBA MUST BE INSTALLED ABOVE GROUND LEVEL WHERE THERE IS NO CHANCE OF FLOODING.
4. PROVIDE ADEQUATE CLEARANCE FOR TESTING AND REPAIRS. DO NOT INSTALL MORE THAN 60" IN HEIGHT AND A MINIMUM OF 12" FROM END OF TEST COCK TO WALL OR STRUCTURE INSIDE BUILDING.
5. INSTALL RPBA IN THE HORIZONTAL POSITION.
6. INSTALL PLUGS IN TEST COCKS.
7. THERE WILL BE NO RPBA INSTALLATIONS IN AREAS ACCESSIBLE TO VEHICLE TRAFFIC UNLESS PRIOR APPROVAL IS OBTAINED FROM ISSAQUAH PUBLIC WORKS OPERATIONS DEPARTMENT.
8. PROVIDE ADEQUATE FREEZE PROTECTION.
9. THE USE OF GALVANIZED WATER FITTINGS AND PIPING IS PROHIBITED. USE COPPER, BRASS OR PLASTIC FITTINGS AND/OR PIPING.

CITY OF ISSAQUAH WASHINGTON	ROBERT J. YORK STATE OF WASHINGTON 19576 REGISTERED PROFESSIONAL ENGINEER	**1/2" - 2" REDUCED PRESSURE BACKFLOW ASSEMBLY (RPBA)**	DATE: **5/18/2022**	STANDARD DETAIL NO.
			SCALE: **NTS**	**W-18**

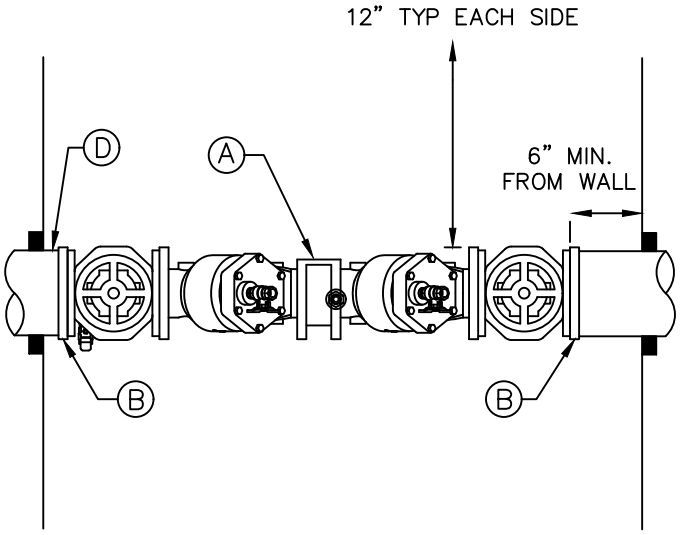

PLAN

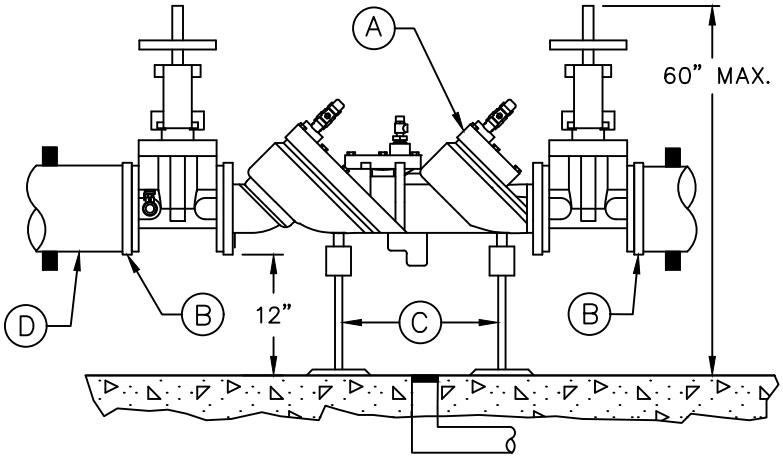

ELEVATION

LEGEND

A. RPBA MUST BE FACTORY ASSEMBLED AND CERTIFIED WITH THE STATE.
B. RESTRAINED JOINT – SEE APPROVED MATERIALS LIST.
C. ADJUSTABLE PIPE STANCHIONS – SEE APPROVED MATERIALS LIST.
D. CLASS 52 DUCTILE IRON PIPE.

NOTES

1. ASSEMBLY TO BE MAINTAINED BY OWNER AND ANNUAL CERTIFICATION REQUIRED.
2. THE RPBA RELIEF PORT DISCHARGE MUST BE DRAINED AWAY FROM THE DEVICE. SIZE PIPE AND DRAIN ACCORDING TO RELIEF PORT MAXIMUM DISCHARGE.
3. THE RPBA MUST BE INSTALLED ABOVE GROUND LEVEL WHERE THERE IS NO CHANCE OF FLOODING.
4. IF INSTALLED OUTDOORS PROVIDE ADEQUATE FREEZE PROTECTION.
5. THERE MUST BE AN APPROVED AIR GAP BETWEEN THE RELIEF PORT AND DRAIN.
6. INSTALL RPBA IN THE HORIZONTAL POSITION ONLY.
7. INSTALL PLUGS IN ALL TEST COCKS.
8. AVOID VEHICULAR TRAFFIC AREAS FOR INSTALLATION.
9. FIRE SUPPRESSION SYSTEMS USE STANDARD DETAIL W–15 (RPDA).

CITY OF ISSAQUAH WASHINGTON	ROBERT J. YORK STATE OF WASHINGTON 19576 REGISTERED PROFESSIONAL ENGINEER	**2 1'2" & LARGER REDUCED PRESSURE BACKFLOW ASSEMBLY (RPBA)**	DATE: **5/18/2022**	STANDARD DETAIL NO.
			SCALE: **NTS**	**W-19**

CONFIGURATION	DESCRIPTION	USE
A	ONE LARGE VALVE & ONE SMALL VALVE. INCLUDES TWO BLOW-OFF ASSEMBLIES.	1. NORMALLY CLOSED CONNECTION BETWEEN A RESERVOIR OR PRV AND A RESERVOIR ZONE. 2. SECONDARY PRV STATION.

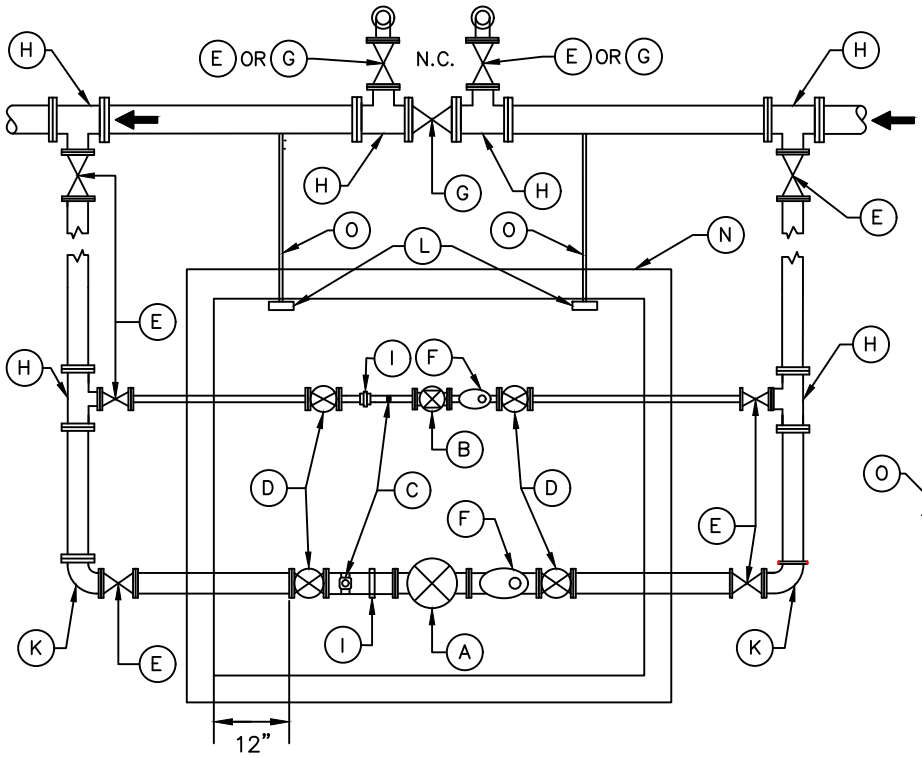

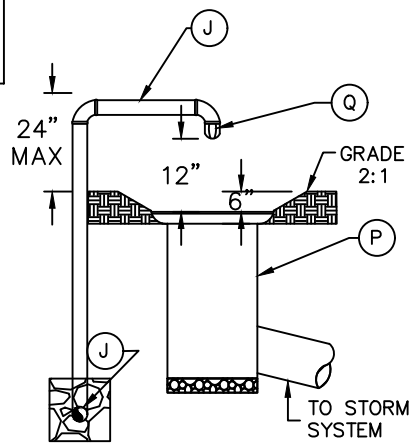

BLOW-OFF DETAIL

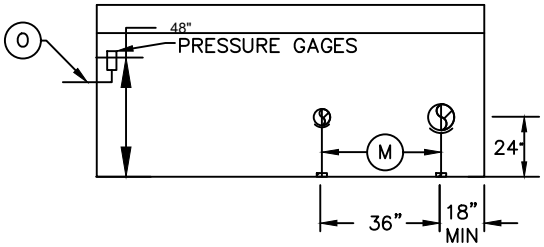

PROFILE DIMENSION DETAIL

LEGEND

A. LARGE PRESSURE REDUCING VALVE: CLA-VAL MODEL 92G-01 BCVKC W/STAINLESS TRIM, X101 AND PRESSURE SUSTAINING CONTROLS.
B. SMALL PRESSURE REDUCING VALVE: CLA-VAL MODEL 90G-01 ABSVKC W/STAINLESS TRIM. THREADED ON 2" AND SMALLER. FLANGED ON 3" AND LARGER.
C. AIR RELEASE VALVE- APCO MODEL 50-28 - 3/32 - 175 PSI.
D. VALVE - FLANGE x FLANGE; C509 W/4" MINIMUM HAND WHEEL OPERATOR (SEE APPROVED MATERIAL LIST).
E. VALVE - FLANGE x MJ; C509 W/2" OPERATING NUT (SEE APPROVED MATERIAL LIST).
F. CLA-VAL BASKET STRAINER
G. VALVE - FLANGE x FLANGE; C509 W/2" OPERATING NUT (SEE APPROVED MATERIAL LIST).
H. TEE - MJ x FLANGE
I. COUPLING - BRASS UNION FOR 2" AND SMALLER, VICTAULIC # 341 FOR 3" AND LARGER.
J. 4" BLOW OFF - SEE STANDARD DETAIL W-04
K. 90° FLANGE x MJ
L. GAUGES - MOUNT VERTICALLY AT 48". SEE APPROVED MATERIALS LIST.
M. PIPE STANCHIONS - BOLTED TO FLOOR, NUMBER AND PLACEMENT MAY VARY. PLACE AS DIRECTED. SEE APPROVED MATERIALS LIST.
N. LADDER AND VAULT - PLACE AS DIRECTED. SEE STANDARD DETAIL G-05 (VAULT-GENERAL FEATURES).
O. 1" TYPE K COPPER LINE WITH 1" x 3/4"MIP COUPLING, 3/4" BRASS BALL VALVE, 3/4" BRASS STREET ELBOW, 3/4" x 1/4" BUSHING. SEE STANDARD DETAIL W-09 (3/4" AND 1" WATER METER SERVICE). SEE APPROVED MATERIALS LIST.
P. 18" CONCRETE PIPE CATCH BASIN W/ BELL UP AND BOTTOM POURED WITH 6" OF CONCRETE. OLYMPIC FOUNDRY GRATE # G20. DISCHARGE PIPE SHALL BE 12" DIA. PLACE OUTSIDE OF FOOT TRAVELED AREAS.
Q. BEEHIVE STRAINER

NOTES

1. ALL JOINTS SHALL BE RESTRAINED.
2. VAULT SHALL BE LOCATED OUT OF TRAFFIC.
3. PAINT ALL ABOVE-GROUND PIPE AND FITTINGS WHITE. PIPE AND FITTINGS MUST BE CLEANED, SCUFFED/SANDED, PREPARED AND PAINTED PER PAINT MANUFACTURER SPECIFICATION. SEE APPROVED MATERIALS LIST FOR PRIMER AND PAINT.
4. PROVIDE GEO-FABRIC AROUND TOP AND SIDES OR ROCK. DO NOT BLOCK DRAIN HOLE. CONTRACTOR TO VERIFY ALL QUANTITIES.
5. TORQUE ALL BOLTS TO MANUFACTURE SPECIFICATIONS.

CITY OF ISSAQUAH WASHINGTON

ROBERT J. YORK STATE OF WASHINGTON 19576 REGISTERED PROFESSIONAL ENGINEER

STANDARD PRESSURE REDUCING STATION CONFIGURATION "A"

DATE: **5/18/2022**

SCALE: **NTS**

STANDARD DETAIL NO.

W-20A

CONFIGURATION	DESCRIPTION	USE
B	ONE LARGE VALVE, ONE SMALL VALVE AND ONE PRESSURE RELIEF VALVE.	1.) STANDARD CONFIGURATION OF A PRIMARY STATION.

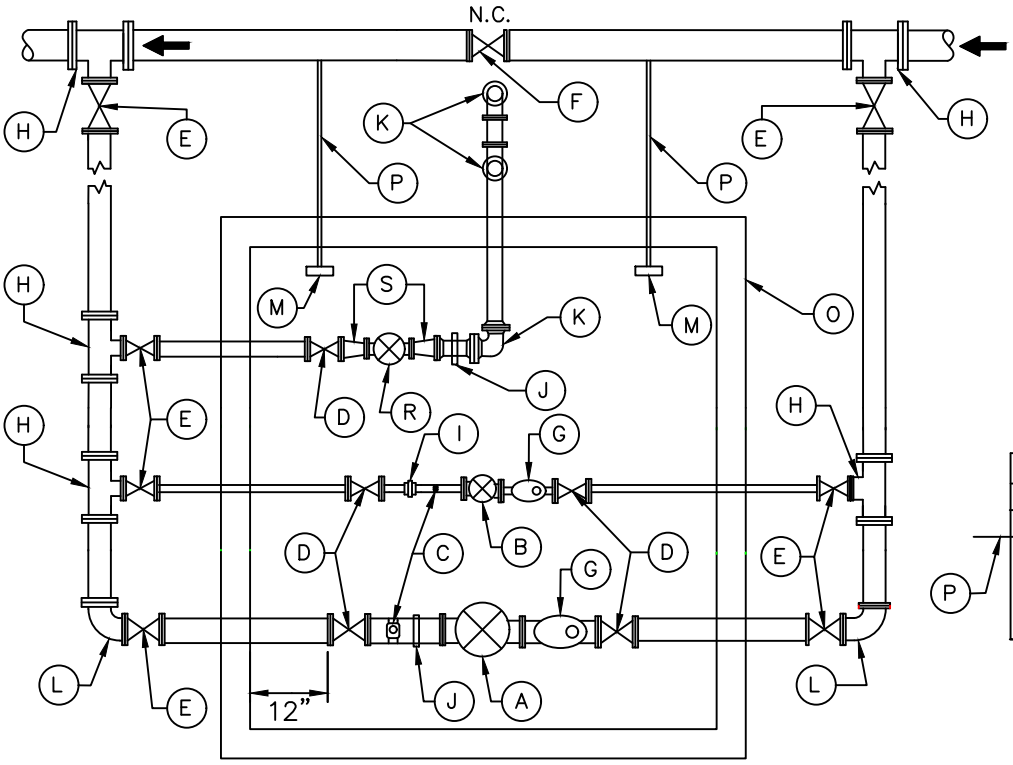

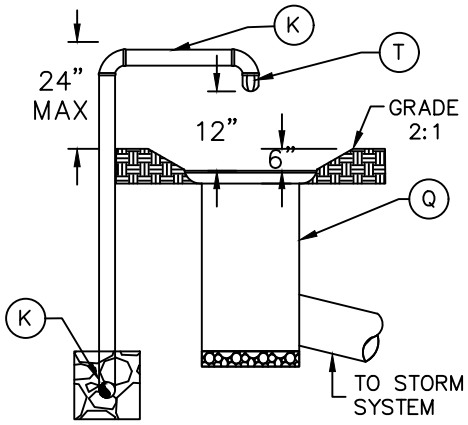

BLOW-OFF DETAIL

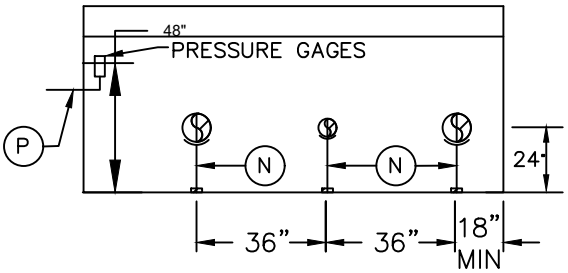

PROFILE DIMENSION DETAIL

LEGEND

A. LARGE PRESSURE REDUCING VALVE: CLA-VAL MODEL 92G-01 BCSKC W/STAINLESS TRIM, X101 AND PRESSURE SUSTAINING CONTROLS.
B. SMALL PRESSURE REDUCING VALVE: CLA-VAL MODEL 90G-01 ABSKC W/STAINLESS TRIM, X101. THREADED ON 2" AND SMALLER. FLANGED ON 3" AND LARGER.
C. AIR RELEASE VALVE- APCO MODEL 50-28 - 3/32 - 175 PSI.
D. VALVE - FLANGE x FLANGE; C509 W/4" MINIMUM HAND WHEEL OPERATOR (SEE APPROVED MATERIAL LIST).
E. VALVE - FLANGE x MJ; C509 W/2" OPERATING NUT (SEE APPROVED MATERIAL LIST).
F. VALVE - MJ x MJ; C509 W/2" OPERATING NUT (SEE APPROVED MATERIAL LIST).
G. CLA-VAL BASKET STRAINER
H. TEE - MJ x FLANGE
I. BRASS UNION - 2" AND SMALLER ONLY, VICTAULIC FOR 3" AND LARGER.
J. COUPLING - VICTAULIC # 341, 3" AND LARGER.
K. 4" BLOW OFF - SEE STANDARD DETAIL W-04
L. 90° - FLANGE x MJ
M. GAUGES - MOUNT VERTICALLY AT 48". SEE APPROVED MATERIALS LIST.
N. PIPE STANCHIONS - BOLTED TO FLOOR, NUMBER AND PLACEMENT MAY VARY. PLACE AS DIRECTED. SEE APPROVED MATERIALS LIST.
O. LADDER AND VAULT - PLACE AS DIRECTED. SEE STANDARD DETAIL G-05 (VAULT-GENERAL FEATURES).
P. 1" TYPE K COPPER LINE WITH 1" x 3/4"MIP COUPLING , 3/4" BRASS BALL VALVE, 3/4" BRASS STREET ELBOW, 3/4" x 1/4" BUSHING. SEE STANDARD DETAIL W-09 (3/4" AND 1" WATER METER SERVICE). SEE APPROVED MATERIALS LIST.
Q. 18" CONCRETE PIPE CATCH BASIN W/ BELL UP AND BOTTOM POURED WITH 6" OF CONCRETE. OLYMPIC FOUNDRY GRATE #G20. DISCHARGE PIPE SHALL BE 12" DIA.
R. PRESSURE RELIEF VALVE: CLA-VAL MODEL 50A-01 BKC W/STAINLESS TRIM. SIZE FOR 30% PRESSURE GAIN.
S. REDUCER AS REQUIRED.
T. BEEHIVE STRAINER

NOTES

1. ALL JOINTS SHALL BE RESTRAINED.
2. VAULT SHALL BE LOCATED OUT OF TRAFFIC.
3. PAINT ALL ABOVE-GROUND PIPE AND FITTINGS WHITE. PIPE AND FITTINGS MUST BE CLEANED, SCUFFED/SANDED, PREPARED AND PAINTED PER PAINT MANUFACTURER SPECIFICATION. SEE APPROVED MATERIALS LIST FOR PRIMER AND PAINT.
4. CONTRACTOR TO VERIFY ALL QUANTITIES.
5. TORQUE ALL BOLTS TO MANUFACTURE SPECIFICATIONS.

CITY OF ISSAQUAH WASHINGTON

ROBERT J. YORK STATE OF WASHINGTON 19576 REGISTERED PROFESSIONAL ENGINEER

STANDARD PRESSURE REDUCING STATION CONFIGURATION "B"

DATE: **5/18/2022**

SCALE: **NTS**

STANDARD DETAIL NO.

W-20B

CONFIGURATION	DESCRIPTION	USE
C	TWO LARGE VALVES, ONE SMALL VALVE AND ONE PRESSURE RELIEF VALVE.	1.) PARALLEL STATION. REQUIRED WHEN PRV STATION IS SOLE SUPPLY FOR ZONE.

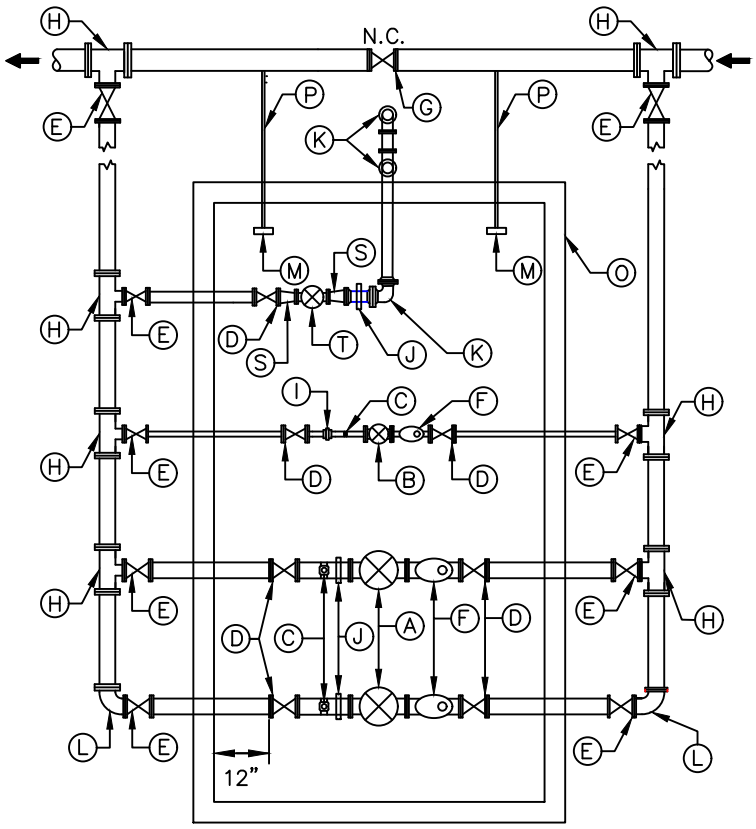

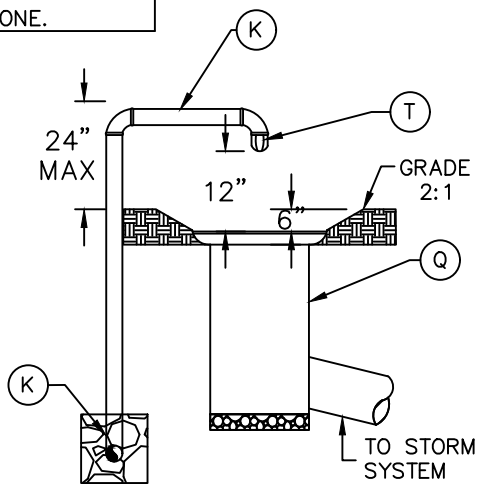

BLOW-OFF DETAIL

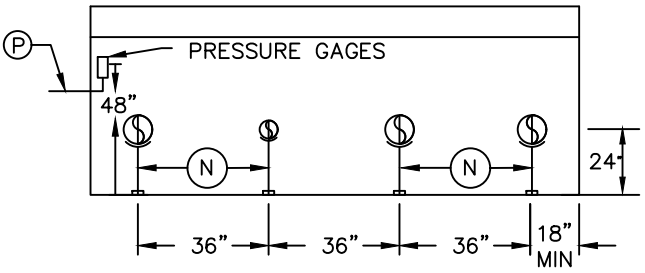

PROFILE DIMENSION DETAIL

LEGEND

A. LARGE PRESSURE REDUCING VALVE: CLA-VAL MODEL 92G-01 BCVKC W/STAINLESS TRIM.
B. SMALL PRESSURE REDUCING VALVE: CLA-VAL MODEL 90G-01 ABSVKC W/STAINLESS TRIM. THREADED ON 2" AND SMALLER. FLANGED ON 3" AND LARGER.
C. AIR RELEASE VALVE- APCO MODEL 50-28 - 3/32 - 175 PSI.
D. VALVE - FLANGE x FLANGE; C509 W/4" MINIMUM HAND WHEEL OPERATOR (SEE APPROVED MATERIAL LIST).
E. VALVE - FLANGE x MJ; C509 W/2" OPERATING NUT (SEE APPROVED MATERIAL LIST).
F. CLA-VAL BASKET STRAINER
G. VALVE - MJ x MJ; C509 W/2" OPERATING NUT (SEE APPROVED MATERIAL LIST).
H. TEE - MJ x FLANGE
I. BRASS UNION - 2" AND SMALLER ONLY, VICTAULIC FOR 3" AND LARGER.
J. COUPLING - VICTAULIC # 341, 3" AND LARGER.
K. 4" BLOW OFF - SEE STANDARD DETAIL W-04.
L. 90° FLANGE x MJ
M. GAUGES - MOUNT VERTICALLY AT 48". SEE APPROVED MATERIALS LIST.
N. PIPE STANCHIONS - BOLTED TO FLOOR, NUMBER AND PLACEMENT MAY VARY. PLACE AS DIRECTED. SEE APPROVED MATERIALS LIST.
O. LADDER AND VAULT - PLACE AS DIRECTED. SEE STANDARD DETAIL G-05 (VAULT-GENERAL FEATURES).
P. 1" TYPE K COPPER LINE WITH 1" X 3/4"MIP COUPLING, 3/4" BRASS BALL VALVE, 3/4" BRASS STREET ELBOW, 3/4" x 1/4" BUSHING. SEE STANDARD DETAIL W-09 (3/4" AND 1" WATER METER SERVICE). SEE APPROVED MATERIALS LIST.
Q. 18" CONCRETE PIPE CATCH BASIN W/ BELL UP AND BOTTOM POURED WITH 6" OF CONCRETE. OLYMPIC FOUNDRY GRATE # G20. DISCHARGE PIPE SHALL BE 12" DIA.
R. BEEHIVE STRAINER
S. REDUCER AS REQUIRED
T. PRESSURE RELIEF VALVE: CLA-VAL MODEL 50A-01 BKC W/STAINLESS TRIM. SIZE FOR 30% PRESSURE GAIN.

NOTES

1. ALL JOINTS SHALL BE RESTRAINED.
2. VAULT SHALL BE LOCATED OUT OF TRAFFIC.
3. PAINT ALL ABOVE-GROUND PIPE AND FITTINGS WHITE. PIPE AND FITTINGS MUST BE CLEANED, SCUFFED/SANDED, PREPARED AND PAINTED PER PAINT MANUFACTURER SPECIFICATION. SEE APPROVED MATERIALS LIST FOR PRIMER AND PAINT.
4. CONTRACTOR TO VERIFY ALL QUANTITIES.
5. TORQUE ALL BOLTS TO MANUFACTURE SPECIFICATIONS.

CITY OF ISSAQUAH WASHINGTON

ROBERT J. YORK STATE OF WASHINGTON 19576 REGISTERED PROFESSIONAL ENGINEER

STANDARD PRESSURE REDUCING STATION CONFIGURATION "C"

DATE: **5/18/2022**

SCALE: **NTS**

STANDARD DETAIL NO.

W-20C

CONFIGURATION	DESCRIPTION	USE
D	ONE LARGE VALVE, ONE SMALL VALVE, ONE PRESSURE RELIEF VALVE AND TWO BLOW-OFF ASSEMBLIES	1.) NORMALLY CLOSED CONNECTION BETWEEN A RESV OR PRV ZONE AND A PRV ZONE W/O A PRESSURE RELIEF ON THE PRIMARY STATION.

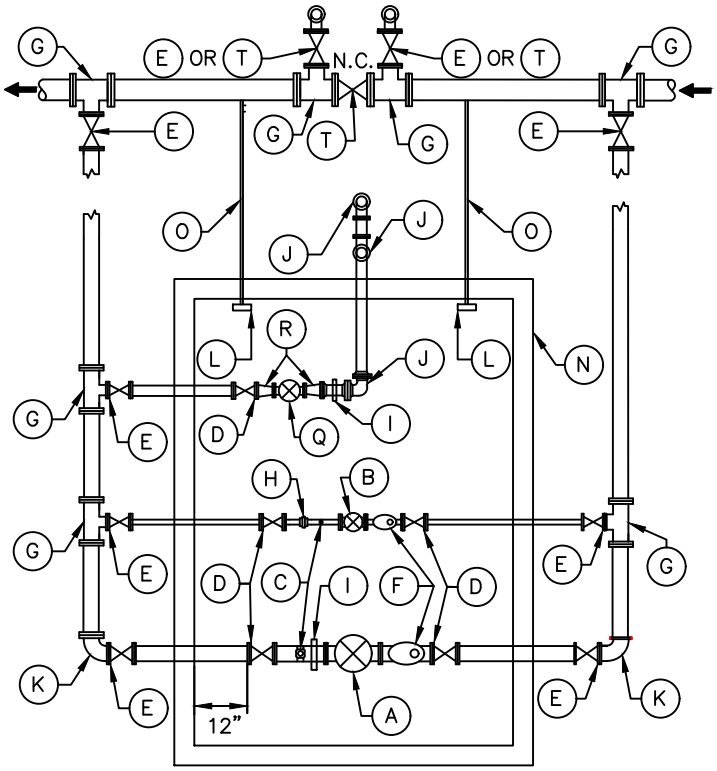

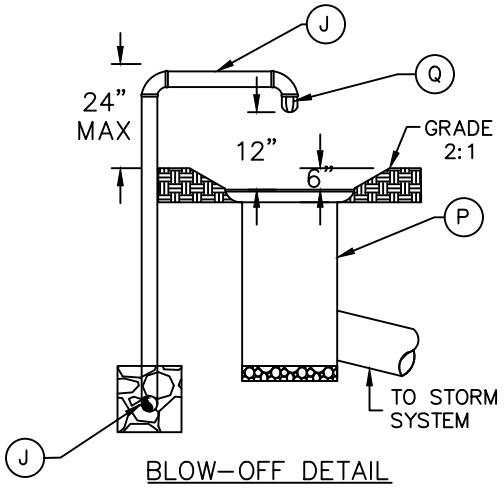

BLOW-OFF DETAIL

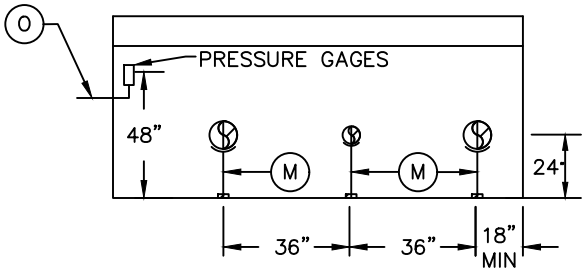

PROFILE DIMENSION DETAIL

LEGEND

A. LARGE PRESSURE REDUCING VALVE: CLA-VAL MODEL 92G-01 BCSKC W/STAINLESS TRIM, X101 AND PRESSURE SUSTAINING CONTROLS.
B. SMALL PRESSURE REDUCING VALVE: CLA-VAL MODEL 90G-01 ABSKC W/STAINLESS TRIM, X101. THREADED ON 2" AND SMALLER. FLANGED ON 3" AND LARGER.
C. AIR RELEASE VALVE- APCO MODEL 50-28 - 3/32 - 175 PSI.
D. VALVE - FLANGE x FLANGE; C509 W/4" MINIMUM HAND WHEEL OPERATOR (SEE APPROVED MATERIAL LIST).
E. VALVE - FLANGE x MJ; C509 W/2" OPERATING NUT (SEE APPROVED MATERIAL LIST).
F. CLA-VAL BASKET STRAINER
G. TEE - MJ x FLANGE
H. BRASS UNION - 2" AND SMALLER ONLY, VITAULIC FOR 3" AND LARGER.
I. COUPLING - VICTAULIC # 341, 3" AND LARGER.
J. 4" BLOW OFF - SEE STANDARD DETAIL W-04.
K. 90° - FLANGE x MJ
L. GAUGES - MOUNT VERTICALLY AT 48". SEE APPROVED MATERIALS LIST.
M. PIPE STANCHIONS - BOLTED TO FLOOR, NUMBER AND PLACEMENT MAY VARY. PLACE AS DIRECTED. SEE APPROVED MATERIALS LIST.
N. LADDER AND VAULT - PLACE AS DIRECTED. SEE STANDARD DETAIL G-05 (VAULT-GENERAL FEATURES).
O. 1" TYPE K COPPER LINE WITH 1" X 3/4"MIP COUPLING, 3/4" BRASS BALL VALVE, 3/4" BRASS STREET ELBOW, 3/4" x 1/4" BUSHING. SEE STANDARD DETAIL W-09 (3/4" AND 1" WATER METER SERVICE). SEE APPROVED MATERIALS LIST.
P. 18" CONCRETE PIPE CATCH BASIN W/ BELL UP AND BOTTOM POURED WITH 6" OF CONCRETE. OLYMPIC FOUNDRY GRATE # G20. DISCHARGE PIPE SHALL BE 12" DIA.
Q. PRESSURE RELIEF VALVE: CLA-VAL MODEL 50A-01 BKC W/BRONZE TRIM. SIZE FOR 30% PRESSURE GAIN.
R. REDUCER AS REQUIRED.
S. BEEHIVE STRAINER
T. VALVE - FLG x FLG; C509 W/2" OPERATING NUT (SEE APPROVED MATERIAL LIST).

NOTES

1. ALL JOINTS SHALL BE RESTRAINED.
2. VAULT SHALL BE LOCATED OUT OF TRAFFIC.
3. ALL PIPING AND FITTINGS WITHIN VAULT SHALL BE COATED WITH 2 COATS OF TNEMEC MEDIUM BLUE EPOXY.
4. PAINT ALL ABOVE-GROUND PIPE AND FITTINGS WHITE. PIPE AND FITTINGS MUST BE CLEANED, SCUFFED/SANDED, PREPARED AND PAINTED PER PAINT MANUFACTURER SPECIFICATION. SEE APPROVED MATERIALS LIST FOR PRIMER AND PAINT.
5. CONTRACTOR TO VERIFY ALL QUANTITIES.
6. TORQUE ALL BOLTS TO MANUFACTURE SPECIFICATIONS.

CITY OF ISSAQUAH WASHINGTON

ROBERT J. YORK STATE OF WASHINGTON 13576 REGISTERED PROFESSIONAL ENGINEER

STANDARD PRESSURE REDUCING STATION CONFIGURATION "D"

DATE: **5/18/2022**

SCALE: **NTS**

STANDARD DETAIL NO.

W-20D

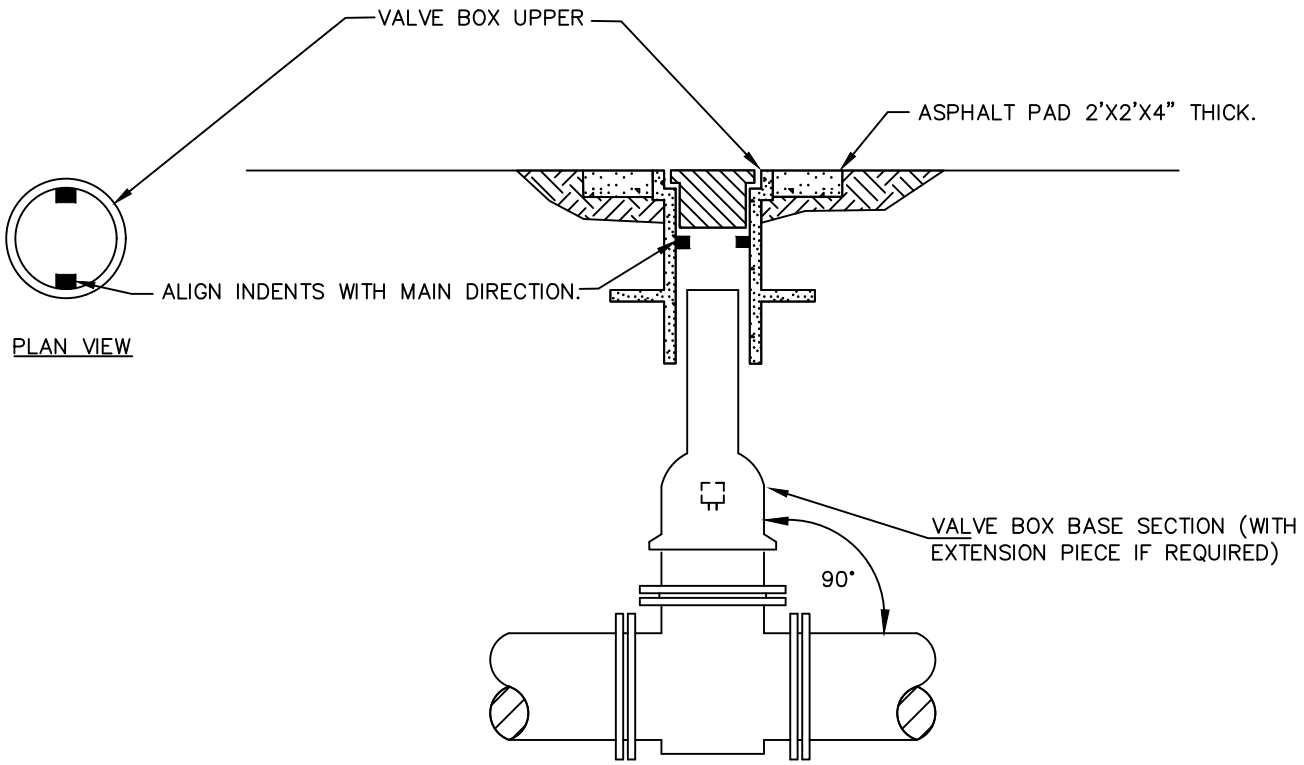

NOTES:

1. BOX SHALL BE PERPENDICULAR TO THE VALVE AND MAIN.
2. BOX SHALL BE CENTERED OVER VALVE NUT.
3. NO DEBRIS WILL BE ALLOWED AROUND THE VALVE NUT.
4. ALL PARTS SHALL BE CAST OR DUCTILE IRON.
5. VALVE BOX AND LID SHALL BE EAST JORDAN 68/8555 (SEE APPROVED MATERIAL LIST).
6. EXTENSIONS FOR DEEP VALVES MAY BE ACCOMPLISHED WITH CAST IRON DRAIN PIPE. BELL END OVER LOWER SECTION.

VALVE OPERATING NUT EXTENSION

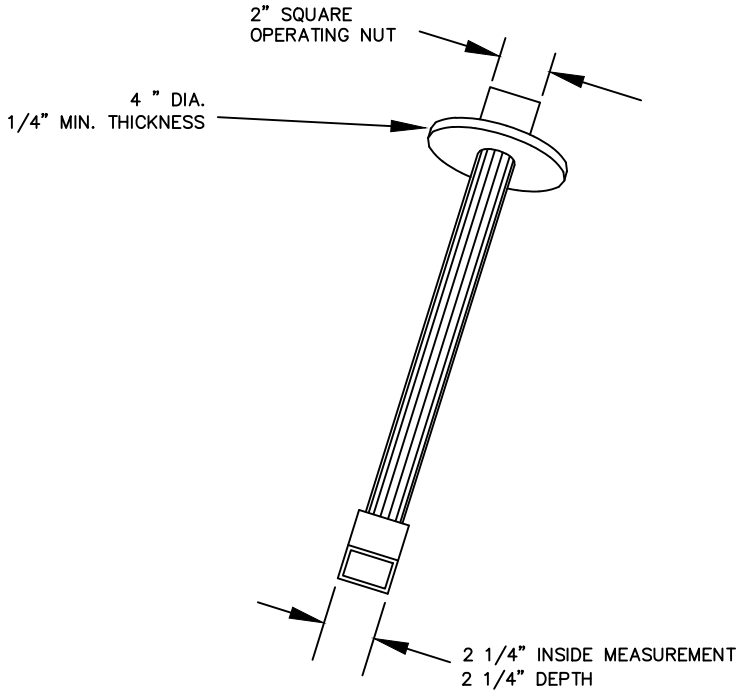

CITY OF ISSAQUAH WASHINGTON

ROBERT J. YORK STATE OF WASHINGTON 19576 REGISTERED PROFESSIONAL ENGINEER

WATER VALVE BOX AND WATER VALVE EXTENSION INSTALLATION

DATE: **5/18/2022**

SCALE: **NTS**

STANDARD DETAIL NO.

W-21

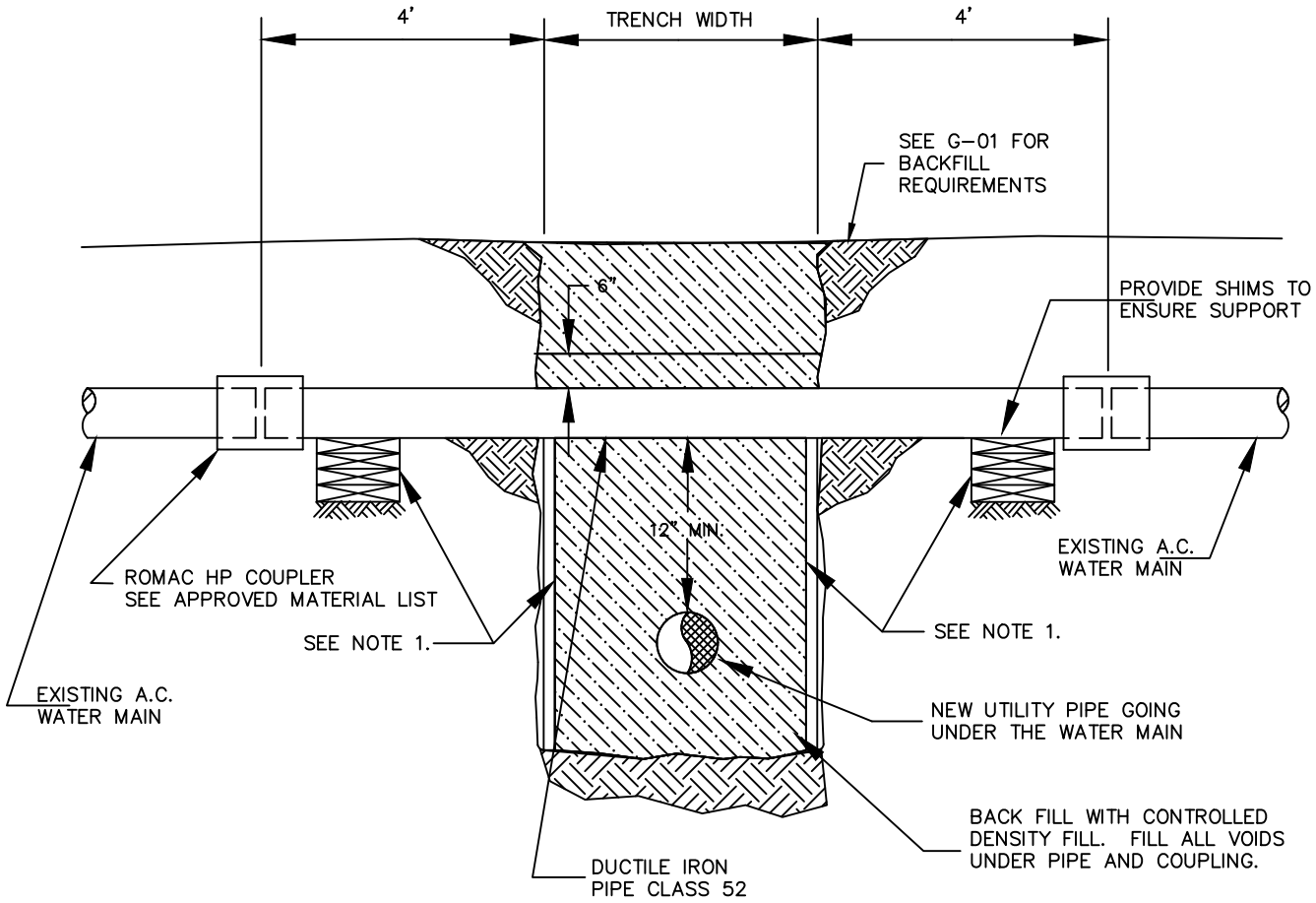

NOTES:

1. D.I. PIPE SHALL REST ON FIRM BEARING EARTH: SHORE TRENCH WALL UNDER WATER MAIN AS SHOWN. SUPPORT PIPE WITH PATIO BLOCKS (8"x16"X 2"). STACK BLOCKS AS REQUIRED TO REST ON FIRM BEARING SOIL.

2. WRAP DUCTILE IRON PIPE AND TRANSITION COUPLINGS WITH 8 MIL POLYETHYLENE CONFORMING TO AWWA C-105 AS REQUIRED BY PUBLIC WORKS.

3. THE CONTRACTOR IS REQUIRED TO FOLLOW ALL REQUIREMENTS FOR ASBESTOS WATER MAIN WORK PRESCRIBED IN WAC 296-62.

4. ALL A.C. PIPE AND CONTAMINATED MATERIALS AND CLOTHING SHALL BE REMOVED FROM THE SITE AND DISPOSED OF IN ACCORDANCE WITH STATE REGULATIONS.

CITY OF ISSAQUAH WASHINGTON	ROBERT J. YORK STATE OF WASHINGTON 19576 REGISTERED PROFESSIONAL ENGINEER	**TYPICAL A.C. WATER MAIN CROSSING REPLACEMENT DETAIL**	DATE: **5/18/2022**	STANDARD DETAIL NO.
			SCALE: **NTS**	**W-22**

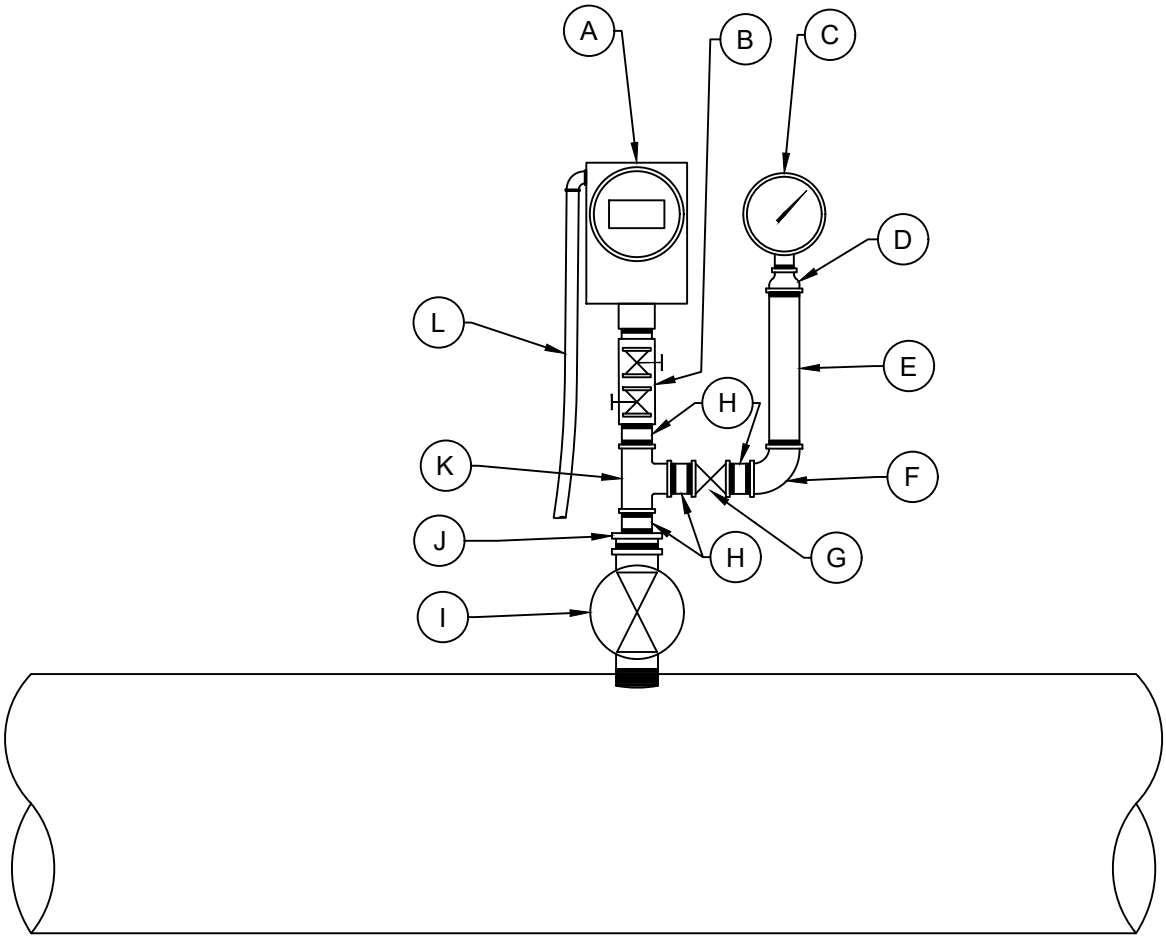

LEGEND:

A. PRESSURE TRANSDUCER – SIEMENS SITRANS. SEE APPROVED MATERIALS LIST.
B. BLOCK & BLEED VALVE – SIEMENS DOUBLE SHUT OFF VALVE. SEE APPROVED MATERIALS LIST.
C. 2 1/2" LIQUID FILLED PRESSURE GAUGE. SEE APPROVED MATERIALS LIST.
D. 1/2" NPT TO 1/4" NPT BRASS REDUCER
E. 1/2" NPT X 7" BRASS NIPPLE
F. 1/2" NPT BRASS STREET ELBOW
G. 1/2" BRASS BALL VALVE
H. 1/2" NPT BRASS CLOSE NIPPLE
I. 3/4" MIP INLET X 3/4" FIP OUTLET CORPORATION STOP. SEE APPROVED MATERIALS LIST.
J. 3/4" MIP X 1/2" FIP BRASS BUSHING.
K. 1/2" NPT BRASS TEE
L. LIQUIDTIGHT CONDUIT TO RTU

NOTES:

1. DIRECT TAP ON PIPE. SADDLE TAP WITH CITY APPROVAL.
2. WALL MOUNTING REQUIRES CITY APPROVAL.
3. PRESSURE GAUGE RANGE SHALL BE TWO TIMES THE EXPECTED STATIC PRESSURE.

CITY OF ISSAQUAH WASHINGTON	ROBERT J. YORK STATE OF WASHINGTON 19576 PROFESSIONAL ENGINEER	**PRESSURE TRANSDUCER**	DATE: **5/18/2022**	STANDARD DETAIL NO.
			SCALE: **NTS**	**W-23**

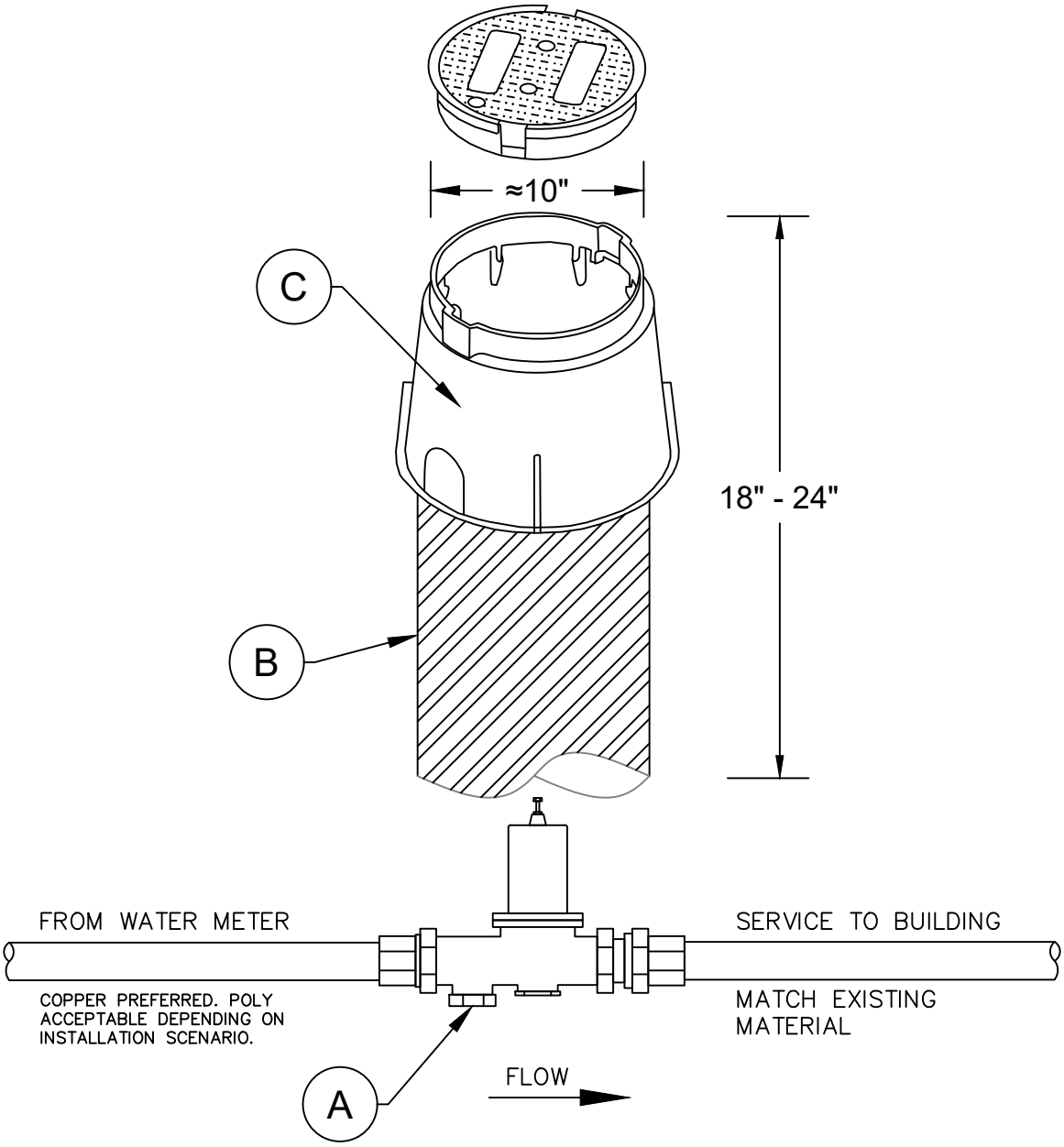

LEGEND

A. ZURN/WILKINS 600XL
B. 10" PVC PIPE (CUT TO FIT)
C. HDPE OR EQUAL

NOTES

1. MAINTENANCE AND OPERATION OF THE VALVE SHALL BE THAT OF THE PROPERTY OWNER.
2. INSTALL CLOSE TO OR INSIDE OF PROPERTY LINE.
3. OPTIONAL INSTALLATION WITHIN BUILDING OR RESIDENCE. PROPERTY OWNER TO WORK WITH A PLUMBER TO FOLLOW UPC AND CITY PERMIT REQUIREMENTS.
4. SET PRESSURE REDUCING VALVE TO 70 PSI.

CITY OF ISSAQUAH WASHINGTON	ROBERT J. YORK STATE OF WASHINGTON 19576 REGISTERED PROFESSIONAL ENGINEER	**PRIVATE PRESSURE REDUCING VALVE ASSEMBLY**	DATE: **5/18/2022**	STANDARD DETAIL NO.
			SCALE: **NTS**	**W-24**